Commodore Super-Pet

Technical Manual

Model SP9000

commodore COMPUTER

P/N 990436

REVISIONS		
LTR	ZONE	DESCRIPTION
1		INFORMATION RELEASE
2		REV PER ECO 2272
2		REV PER ECO 2304
3		REV PER ECO 2341
4		REV PER ECO 2881

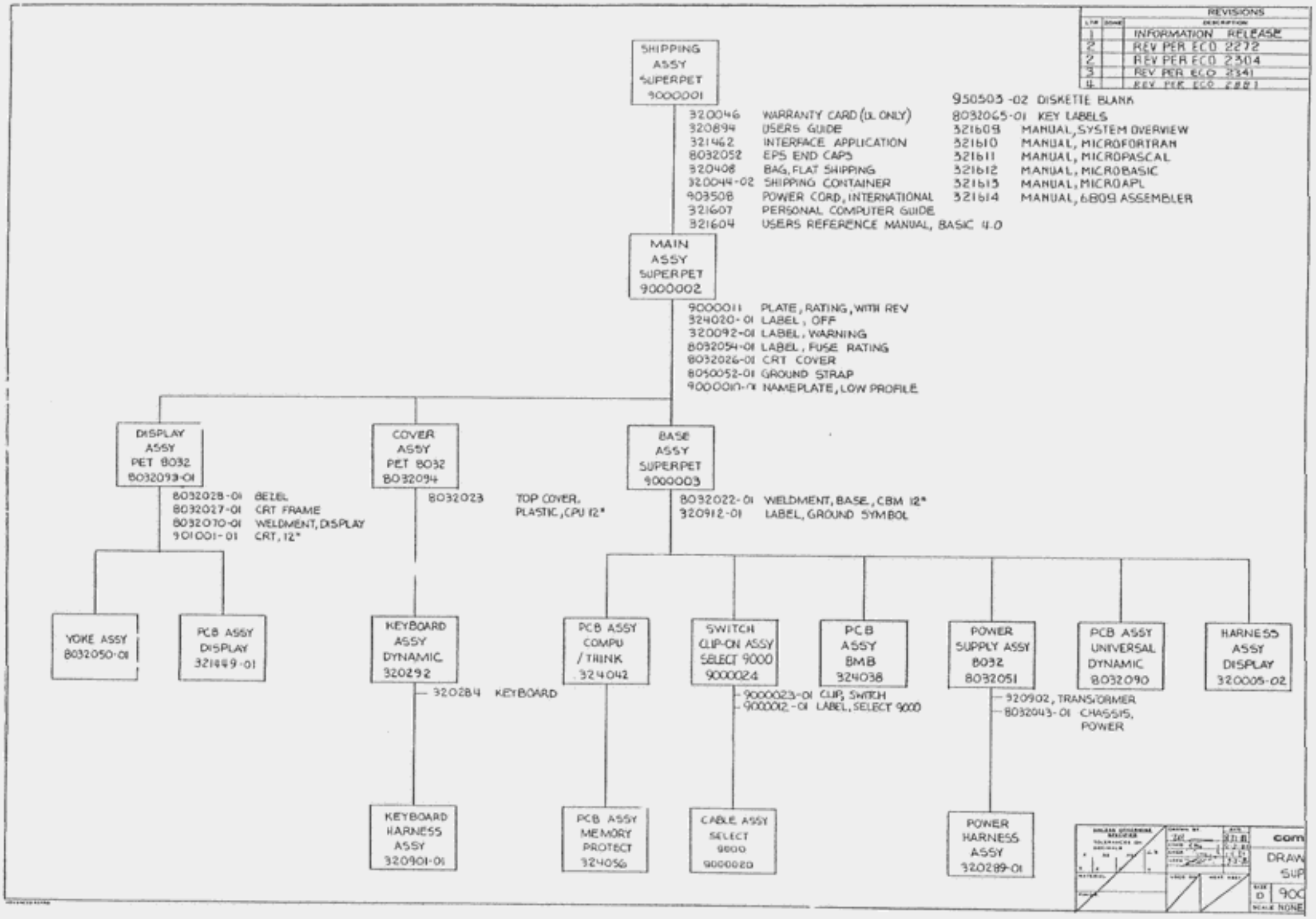

REVISIONS				
LTR	ZONE	DESCRIPTION	DATE	APPROVE
		SEE SHEET 1		

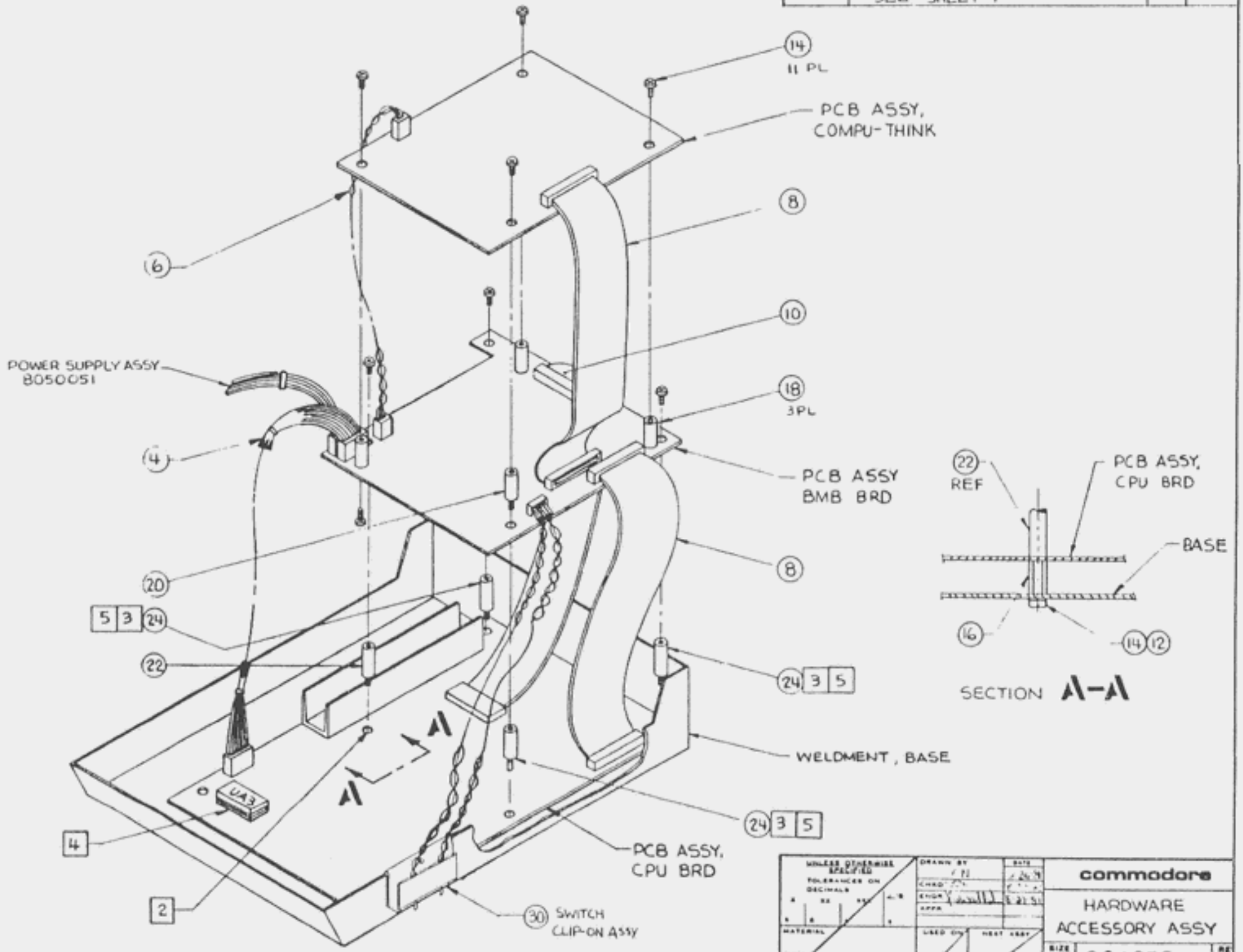

UNLESS OTHERWISE SPECIFIED TOLERANCES ON DECIMALS	DRAWN BY	commodore
	CHKD	HARDWARE ACCESSORY ASSY
	ENGR	
	APPR	
MATERIAL	USED ON	NEXT ASSY
FINISH		
	SIZE C	324052 REV C
	SCALE NONE	SHEET 3 OF 3

ADVANCED REPRO

PART NO.	DESCRIPTION
324038-01	PCB ASSY-BMB 60 Hz

REVISIONS

LTR	ZONE	DESCRIPTION	DATE
A		PRODUCTION RELEASE	8/26/81
A		PER ECO 2263	9/21/81
A		REV PER ECO 2248	9/21/81
B		REV PER ECO 2310 & 2324	10/9/81
C		REV PER ECO 2377	11/24/81
D		REV PER ECO 2458	1/19/82

6 ROMS CAN BE REPLACED WITH A PROGRAMED 2516 EPROM.

5 ROMS CAN BE REPLACED WITH A PROGRAMED 2532 EPROMS.

4 REQUIRED WITH REV A ARTWORK C

3 SOLDER JUMPER TO XTAL & PCB

2. IDENTIFY WITH APPLICABLE DASH AND REV LETTER.

1. SHEET 4 OF 4 SIZE C
ASSY DWG

NOTES: UNLESS OTHERWISE SPECIFIE

commodore	TITLE PCB ASSY-BMB	DRAWN BY	DATE 8-26-81	ENGR		SIZE B	DRAWING NUMBER 3240
		CHKD	8-26-81	APPR			SHEET 1

QUANTITY REQD PER PART / DASH NO. :01	ITEM	DS	PART NUMBER	DESCRIPTION	REF DES	BEND	NOTES
1	1	B/C	324036-01	PCB FABRICATION-BMB			
REF	2	D	324037-01	SCHEMATIC DIAGRAM-BMB			
	3						
1	4	B	901893-01	IC, 6809E, CPU	U4		
1	5	B	901435-01	,6502, CPU	U3		
1	6	B	901521-01	,74LS00, QUAD NAND	U8		
1	7	B	901521-02	,74LS04, HEX INVERTER	U13		
1	8	B	901521-03	,74LS08, QUAD AND	U5		
1	9	B	901525-05	,74S08, QUAD AND	U6		
1	10	B	901521-04	,74LS20, DUAL 4-INPUT NAND	U16		
1	11	B	901521-53	,74LS30, 8-INPUT NAND	U15		
2	12	B	901521-49	,74LS123, DUAL ONE-SHOT	U2,7		
3	13	B	901521-16	,74LS138, 3 TO 8 DECODER	U11,12,14		
2	14	B	901521-42	,74LS273, OCTAL D F-F	U9,10		
1	15	B	901894-01	,4049B, CMOS INVERTER	U1		USE FAIRCHILD PRODUCT ONL
1	16	B	901524-06	,1488, LINE DRIVER	U24		
1	17	B	901524-07	,1489, RECEIVER	U25		
1	18	B	901895-01	IC, 6551, ACIA	U23		
	19						
1	20	B	901550-38	RESISTOR, CARBON 1/4W 5% 510Ω	R4		
3	21	B	901550-01	1K	R5,6,9		
1	22	B	901550-69	1.5K	R3		
1	23	B	901550-96	7.5K	R1		
1	24	B	901550-20	10K	R2		
2	25	B	901550-16	RESISTOR, CARBON 1/4W 5% 150K	R7,8		
	26						
1	27	B	900010-48	CAP, CERAMIC 50V/100pF	C2		
1	28	B	900010-49	,CERAMIC 50V/200pF	C1		
2	29	B	900010-50	,CERAMIC 50V/560pF	C3,4		
8	30	B	900010-38	,CERAMIC 50V/.01μF	C5,8,12,14,15,16,18,19,22		
4	31	B	900402-16	,TANTALUM 35V/2.2μF	C6,20,23,24		
3	32	B	900101-46	CAP, ELECTROLYTIC 25V/2200μF	C9,10,11		
	33						
	34						
	35						
	36						
	37						

commodore

TITLE: PCB ASSY-BMB

DRWN BY: Martin DATE 8-20-81
CHKD: R.W. 8-26-81
ENGR: DATE 8-26-81
APPR: 8-26-81

SIZE B 324038 REV D

QUANTITY REQD PER PART / DASH NO. -01	ITEM	DS	PART NUMBER	DESCRIPTION	REF DES	BEND	NOTES
3	38	B	901527-02	VOLTAGE REGULATOR, +5	VR1,2,3		
1	39	B	902727-01	TRANSISTOR, PNP, TIP 30	Q2		
2	40	B	902847-03	TRANSISTOR, NPN, 2N2222	Q1,3		
4	41	B	900753-01	DIODE, IN5402	CR1,2,3,4		
	42						
	43						
	44						
1	45	B	903316-03	HEADER ASSY, .156 CENTERS	J6		3 PIN
1	46	B	903331-07	HEADER ASSY, .100 CENTERS	J4		7 PIN, REMOVE PIN 2
2	47	B	903316-09	HEADER ASSY, .156 CENTERS	J5A, J5B		9 PIN, REMOVE PIN 7
1	48	B	903345-20	HEADER ASSY, DUAL ROW .100 CENTERS	J8		40 PIN
2	49	B	903345-25	HEADER ASSY, DUAL ROW .100 CENTERS	J1&2		50 PIN
1	50	B	903266-01	CONNECTOR, RIGHT ANGLE,	J3		RS-232
1	51	B	903335-05	HEADER	J9		
	52						
	53						
	54						
1	55	B	900555-02	CRYSTAL, 1.84320 MHZ	Y1		
2	56	B	902910-01	HEATSINK, TO-220	XVR1,2		
	57						
	58						
	59						
8	60	B	904150-01	IC SOCKET, 14 PIN	XU5,6,8,13,15,16,24,25		
6	61	B	904150-02	16 PIN	XU1,2,7,11,12,14		
2	62	B	904149-04	20 PIN	XU9,10		
6	63	B	904150-04	24 PIN	XU17-22		
1	64	B	904150-05	28 PIN	XU23		
2	65	B	904150-06	IC SOCKET, 40 PIN	XU3,4		
	66						
	67						
	68						
	69						
	70						
	71						
	72						
	73						
2	74		906403-19	RIVET, OPEN			

commodore

TITLE: PCB ASSY-BMB

DRWN BY: 7R DATE 8-20-81
CHKD: RW DATE 8-21-81
ENGR: DATE 9-26-81
APPR: DATE 9-26-81

SIZE B 324038 REV D

QUANTITY REQD PER PART / DASH NO. 01	ITEM	DS	PART NUMBER	DESCRIPTION	REF DES	BEND	NOTES
2	75		907401-02	WASHER, SHOULDER #4			
2	76	B	906610-03	SCREW, PHLPS 6-32X.375			
2	77	B	905970-04	KEP-NUT #6-32			
	78						
1	79		320086-02	BUSS, WIRE			SEE NOTE 4
1	80		903780-11	KYNAR WIRE 30 AWG			SEE NOTE 4
	81						
A/R	82		904907-01	THERMAL COMPOUND			
	83						
	84						
	85						
	86						
1	87	B	901898-01	I.C. ROM 2332	U17		SEE NOTE 5
1	88	B	-02		U18		
1	89	B	-03		U19		
1	90	B	-04		U20		
1	91	B	901898-05	I.C. ROM 2332	U22		SEE NOTE 5
1	92	B	901897-01	I.C. ROM 2316	U21		SEE NOTE 6
—	93						
	94						
	95						
	96						
	97						
	98						
	99						
	100						

commodore

TITLE: PCB ASSY - BMB

DRWN BY: [illegible] DATE 10-13-81

CHKD:

ENGR: DATE

APPR:

SIZE B 324038 REV D

REVISIONS				
LTR	ZONE	DESCRIPTION	DATE	APPROV
		SEE SHEET 1		

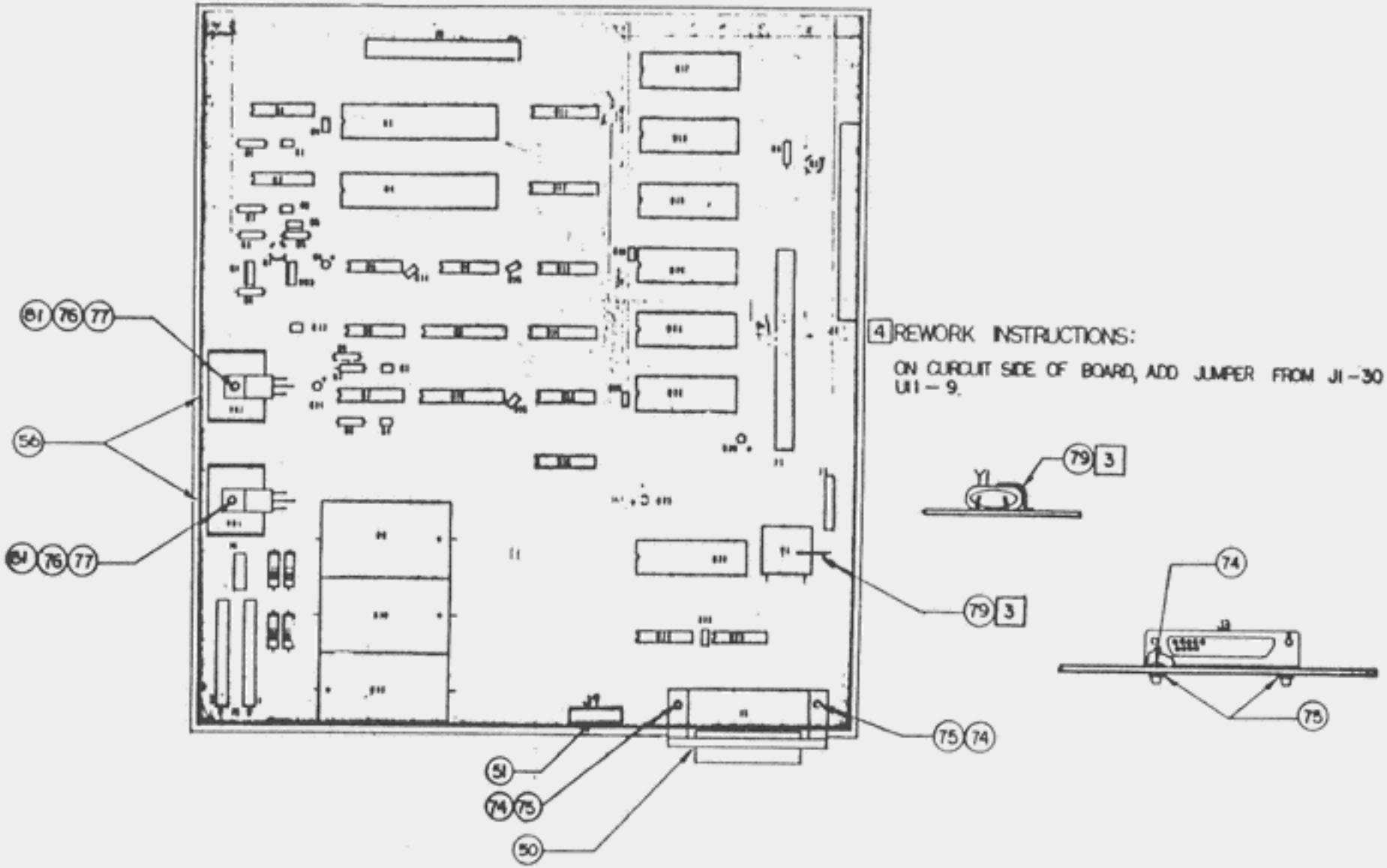

4 REWORK INSTRUCTIONS:

ON CURCUIT SIDE OF BOARD, ADD JUMPER FROM J1-30 TO U11-9.

UNLESS OTHERWISE SPECIFIED TOLERANCES ARE: DECIMALS .X ±.5 .XX ±.25 .XXX ±.10 ∠ ±1°	DRAWN BY:	DATE	commodore
	CHKD:		PCB ASSEMBLY BMB BOARD
	ENGR:		
	APPR:		
MATERIAL:	USED ON: SP 9000	NEXT ASSY: 9000002	SIZE C 324038 REV D
FINISH:			SCALE 1/1 SHEET 5 OF 5

REVISIONS				
LTR	ZONE	DESCRIPTION	DATE	APPROVED
A		PRODUCTION RELEASE	[illegible]	[illegible]
A		PER ECO 2309	[illegible]	[illegible]

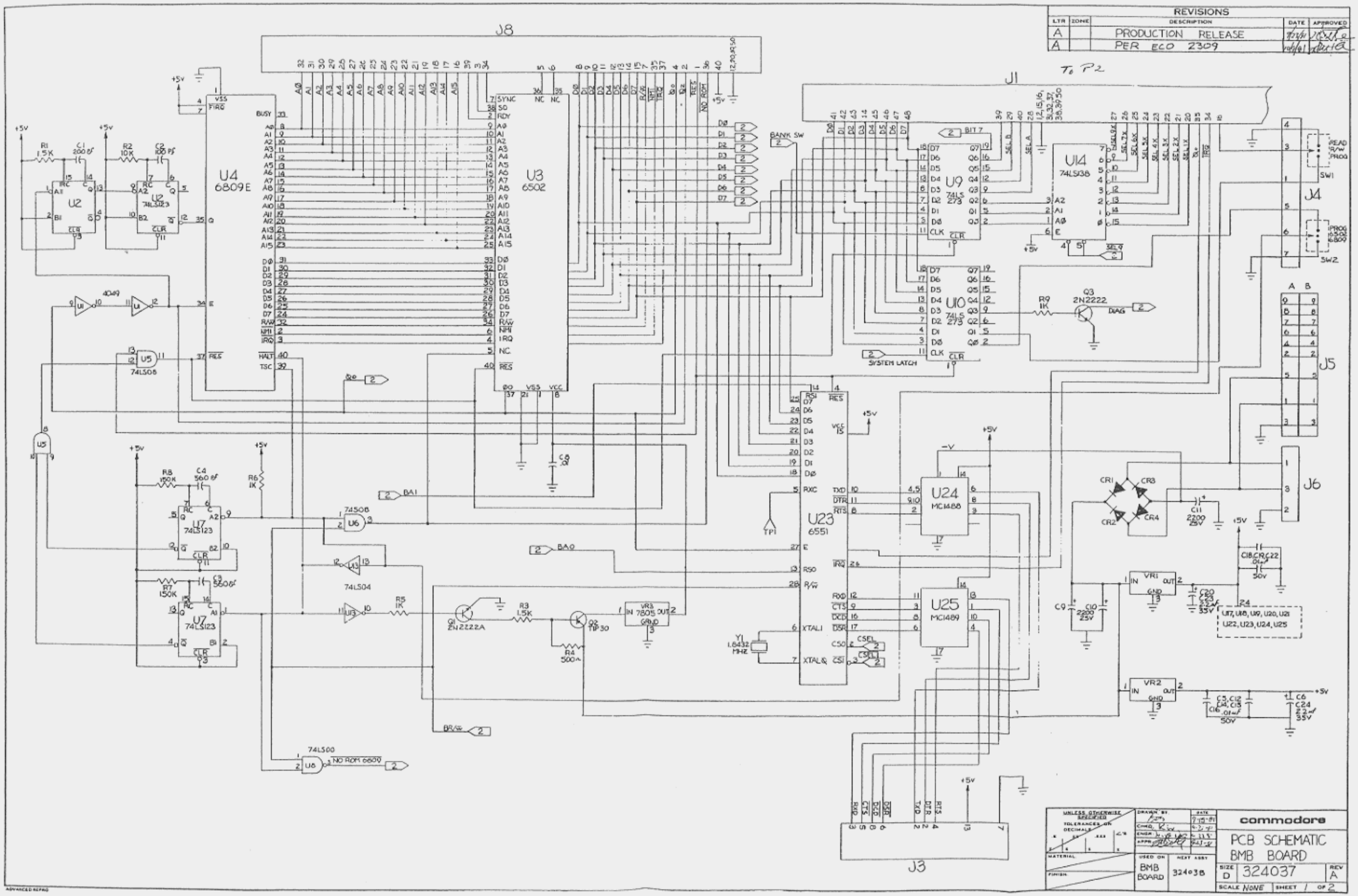

REVISIONS				
LTR	ZONE	DESCRIPTION	DATE	APPROVED
		SEE SHEET 1		

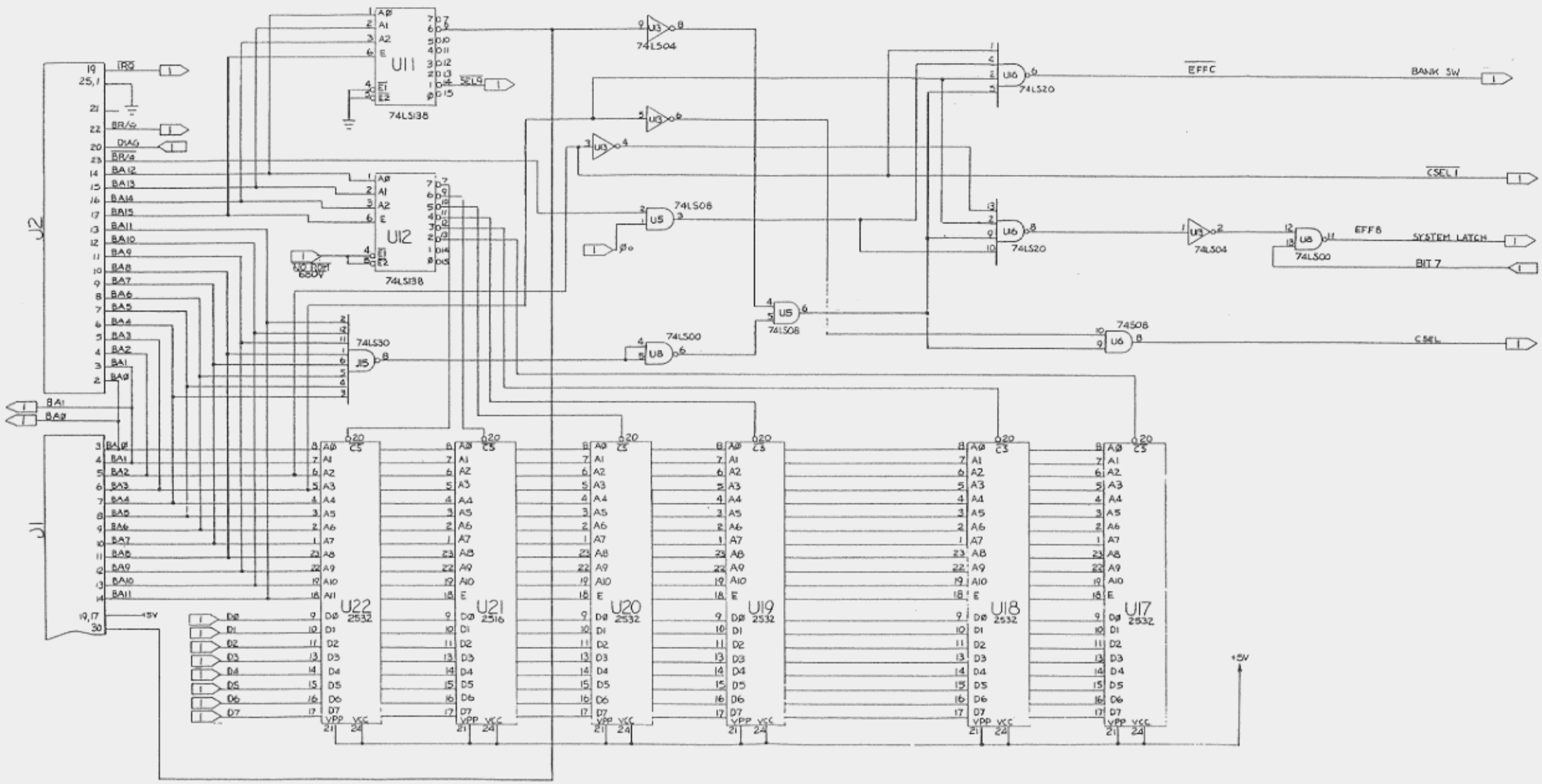

UNLESS OTHERWISE SPECIFIED TOLERANCES ON DECIMALS	DRAWN BY	DATE	commodore
	CHECK		PCB SCHEMATIC BMB BOARD
	ENGR		
	APPR		
MATERIAL	USED ON: BMB BOARD	NEXT ASSY: 324038	SIZE D 324037 REV A
FINISH			SCALE NONE SHEET 2 OF 2

ADVANCED REPRO

PART NO.	DESCRIPTION
324042-01	PCB ASSY, COMPU-THINK

REVISIONS

LTR	ZONE	DESCRIPTION	DATE	APPROVED
A		PRODUCTION RELEASE	8/24/81	
A		REV PER ECO 2247	9/4/81	
B		PER ECO 2323	9/9/81	
C		REV PER ECO 2378	9/27/81	

[4] REQUIRED WITH REV A ARTWORK ONLY.

[3] ITEM 69 CONNECTS INTO ITEM 63.

2. IDENTIFY WITH COMMODORE PART NO. AND APPLICABLE REV LETTER.

1. SHEET 4 OF 4 SIZE D
ASSY DWG

NOTES-UNLESS OTHERWISE SPECIFIED:

commodore	TITLE: PCB ASSY, COMPU-THINK	DRAWN BY: Mart	DATE: 8-6-81	ENGR:		SIZE: B	DRAWING NUMBER: 324042
		CHKD: R W	8-24-81	APPR:			SHEET 1 OF 5

QUANTITY REQD PER PART / DASH NO. 01	ITEM	DS	PART NUMBER	DESCRIPTION	REF DES	BEND	NOTES
1	1	D	324041-01	SCHEMATIC, COMPU-THINK			
1	2	D	324040-01	PCB FAB, COMPU-THINK			
	3						
1	4	B	901522-04	IC, 7400, QUAD NAND	U9, 17		
2	5	B	901521-21	IC, 74LS02, QUAD NOR	U18, 22		
1	6	B	901521-37	IC, 74LS05, HEX INVERTER	U25		
1	7	B	901521-03	IC, 74LS08, QUAD AND	U27		
3	8	B	901521-24	IC, 74LS10, TRIPLE 3-INPUT NAND	U10, 16, 23		
1	9	B	901521-04	IC, 74LS20, DUAL 4-INPUT NAND	U11		
1	10	B	901521-08	IC, 74LS107, J-K FLIP-FLOP	U21		
1	11	B	901521-49	IC, 74LS123, DUAL ONE-SHOT	U26		
1	12	B	901521-50	IC, 74LS132, QUAD NAND W/SCHMITT	U20		
2	13	B	901521-11	IC, 74LS157, QUAD 2-1 MULTIPLEXER	U2, 5		
2	14	B	901522-23	IC, 74157, QUAD 2-1 MULTIPLEXER	U1, 4		
4	15	B	901521-51	IC, 74LS241, OCTAL BUFFER	U6, 8, 12, 14		
1	16	B	901521-13	IC, 74LS244, OCTAL BUFFER	U13		
1	17	B	901521-52	IC, 74LS293, 4 BIT BINARY COUNTER	U7		
1	18	B	901521-45	IC, 74LS393, DUAL 4 BIT BINARY COUNTER	U3		
32	19	B	901470-07	IC, 4116, DYNAMIC RAM	U29-60		
	20						
	21						
1	22		901527-03	VOLTAGE REGULATOR, -5 VOLT	U61		
1	23		901527-01	VOLTAGE REGULATOR, +12 VOLT	U19		
1	24		901527-02	VOLTAGE REGULATOR, +5 VOLT	U24		
1	25		900752-02	DIODE, FAST RECTIFIER	CR3		
2	26		900653-01	DIODE, BRIDGE	CR1, 2		
	27						
1	28	B	900050-18	CAP, DIPPED MICA, 22pf, 500V	C79		
1	29	↑	-19	50pf,	C81		
1	30		-20	62pf	C76		
1	31		-21	82pf	C78		
1	32	↓	-22	100pf	C80		
1	33	B	900050-23	CAP, DIPPED MICA, 180pf, 500V	C77		
63	34	B	900020-01	CAP, MONO, CERAMIC, .1µf, 50V	C1-63		
6	35	B	900402-15	CAP, DIPPED TANT, 10µf, 25V	C65, 67, 73, 74, 75, 82		
3	36	B	900100-44	CAP, ELECT, RADIAL, 470µf, 16V	C68, 69, 72		
1	37	B	900100-49	CAP, ELECT, RADIAL, 470µf, 25V	C66		

commodore

TITLE: PCB ASSY, COMPU/THINK

DRWN BY: [illegible] DATE 8-6-81
CHKD: [illegible] DATE 8-24-81
ENGR: [illegible] DATE
APPR: [illegible]

SIZE B | 324042 | REV C | SHT 2/5

QUANTITY REQD PER PART / DASH NO. 01	ITEM	DS	PART NUMBER	DESCRIPTION	REF DES	BEND	NOTES
2	38	B	900100-07	CAP, ELECT, RADIAL, 1000uf, 16V	C70, 71		
	39						
	40						
2	41	B	902422-03	RESISTOR, NETWORK, 8 PIN SIP, 33Ω	RP1, 3		
1	42	B	902442-26	8 PIN SIP, 2K	RP9		
1	43	B	902441-29	6 PIN SIP, 3.3K	RP7		
4	44	B	902442-29	8 PIN SIP, 3.3K	RP2,4,6,8		
1	45	B	902420-48	RESISTOR, NETWORK, 16 PIN DIP, 2K	RP5		
2	46	B	901550-105	RESISTOR, CARBON, 1/4W, 5%, 33Ω	R5,6		
1	47	B	901550-02	RESISTOR, CARBON, 1/4W, 5%, 3.3K	R1		
3	48	B	901550-20	RESISTOR, CARBON, 1/4W, 5%, 10K	R2,3,4		
	49						
	50						
1	51	B	903316-03	HEADER ASSY, .156 CENTERS	P1		3 PIN
1	52	B	903345-25	HEADER ASSY, DUAL ROW, .100 CENTER,	P2		50 PIN
1	53	B	903446-01	CONNECTOR HOUSING, 50 PIN	P3		
	54						
2	55	B	903549-12	FUSE, AXIAL LEAD 3A	F1,2		
	56						
1	57	B	902905-01	HEATSINK, TO-220	XU61		
2	58	B	902911-01	HEATSINK,	XU19,24		
1	59	B	902912-01	HEATSINK,	XU19,24		
	60						
2	61	B	907401-02	WASHER, SHOULDER #4	XU61		
14	62	B	904150-01	IC SOCKET 14 PIN	XU3,7,9-11,16-18,20-23,25,27		
39	63	B	904150-02	IC SOCKET 16 PIN	XU1,2,4,5,26,29-36,37-44,45-52,53-60,64,XRP5		
5	64	B	904149-04	IC SOCKET 20 PIN	XU6,8,12-14		
	65						
	66						
13	67	B	320086-02	BUS WIRE	J1,2,4,5,U15		
	68						
1	69	B	324056-01	PCB ASSY, MEMORY PROTECT			SEE NOTE [3]
	70						
	71						
3	72		906600-06	SCREW, PHILLIPS, 4-40x.438			
3	73		905970-05	KEP NUT 4-40			
	74						

commodore	TITLE: PBC ASSY, COMPU/THINK	DRWN BY: Maitre	DATE 8-6-81	ENGR:	DATE	SIZE B	324042	REV C	SHT 3/5
		CHKD:	6-24-81	APPR:					

QUANTITY REQD PER PART / DASH NO. 01	ITEM	DS	PART NUMBER	DESCRIPTION	REF DES	BEND	NOTES
	75						
1/R	76	B	904907-01	THERMAL COMPOUND			
	77						
1	78	B	903780-01	KYNAR WIRE, 30AWG			SEE NOTE 4
1	79	B	903780-07	KYNAR WIRE, 30AWG			SEE NOTE 4
	80						

commodore

TITLE: PCB ASSY, COMPU/THINK

DRWN BY: DATE
CHKD:
ENGR: DATE
APPR:

SIZE B | 324042 | REV C | SHT 4/5

REVISIONS				
LTR	ZONE	DESCRIPTION	DATE	APPROVED
		SEE SHEET		

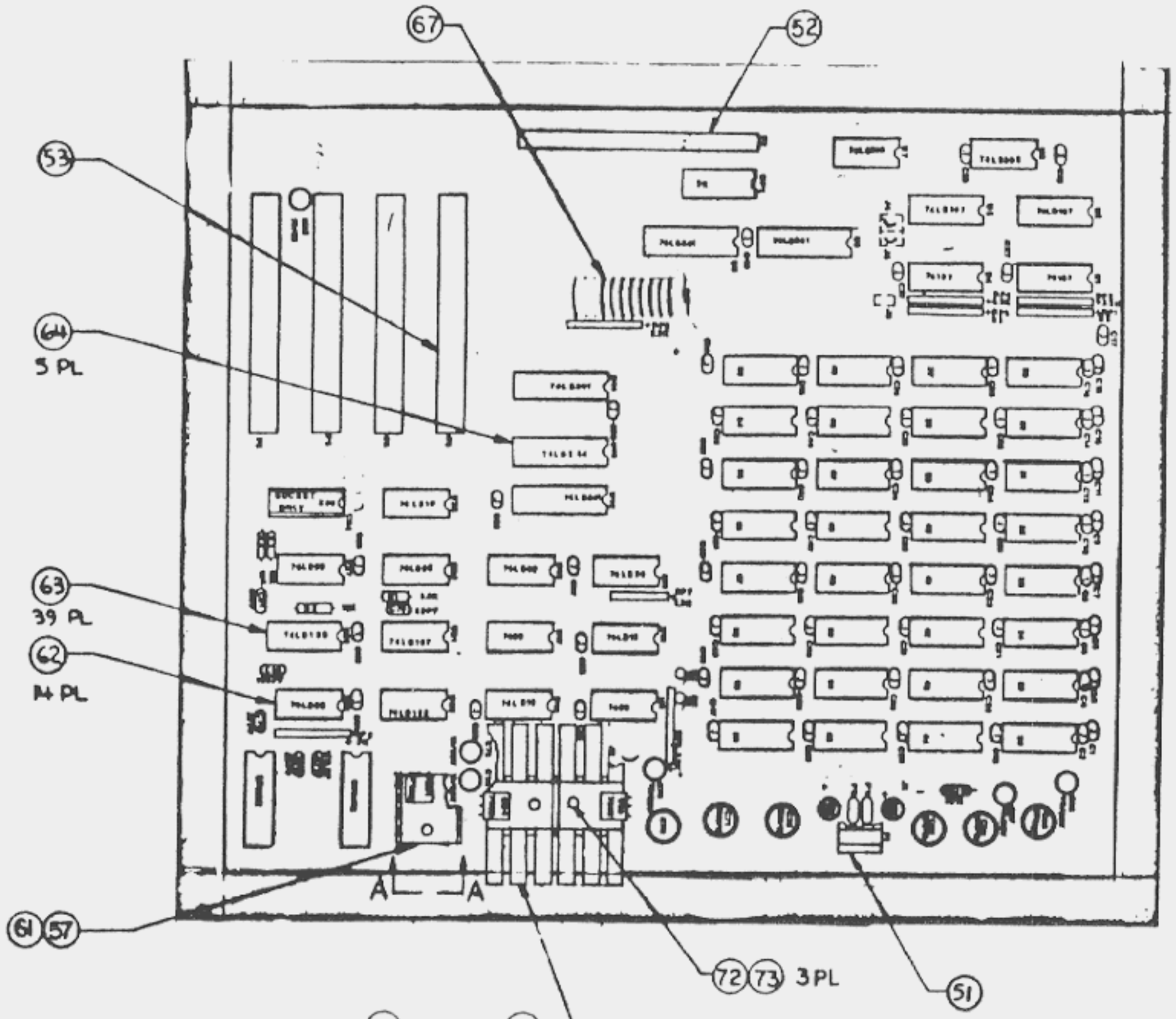

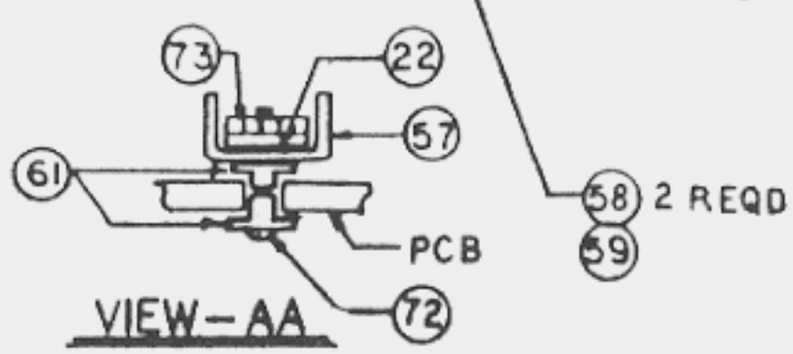

4 REWORK INSTRUCTIONS:

1. ADD JUMPER FROM U15-12 TO GROUND.
2. ADD JUMPER FROM P2-28 TO COMMON POINT OF J3 AND J5.
3. ADD JUMPER FROM P2-30 TO P3-14
4. CUT OFF PINS 4 & 5 OF U27.
5. CUT TRACE BETWEEN FEEDTHRUS NEXT TO U11 AND RP7.
6. ADD JUMPERS TO J1, J2, J4, J6 & U15 AS SHOWN.

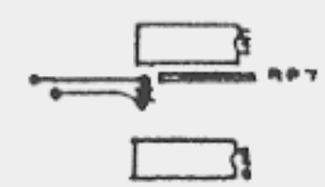

REWORK INSTRUCTION 5

-01 SHOWN

UNLESS OTHERWISE SPECIFIED TOLERANCES ON: DECIMALS .X ±.1 .XX ±.03 .XXX ±.010 ∠ ±1°	DRAWN BY:	DATE 8-6-81	commodore
	CHECKED:	8-14-81	PCB ASSY COMPU/THINK
	ENGR:	8-26-81	
	APPD:		
MATERIAL:	USED ON SUPER PET	NEXT ASSY 324050	SIZE C 324042 REV C
FINISH:			SCALE 1/1 SHEET 5 OF 5

PART NO.	DESCRIPTION
324056-01	PCB ASSY, MEMORY PROTECT

REVISIONS

LTR	ZONE	DESCRIPTION	DATE	APPROVED
A		PRODUCTION RELEASE	8-27-81	[illegible]
B		REV PER ECO 2302	4/9/01	[illegible]

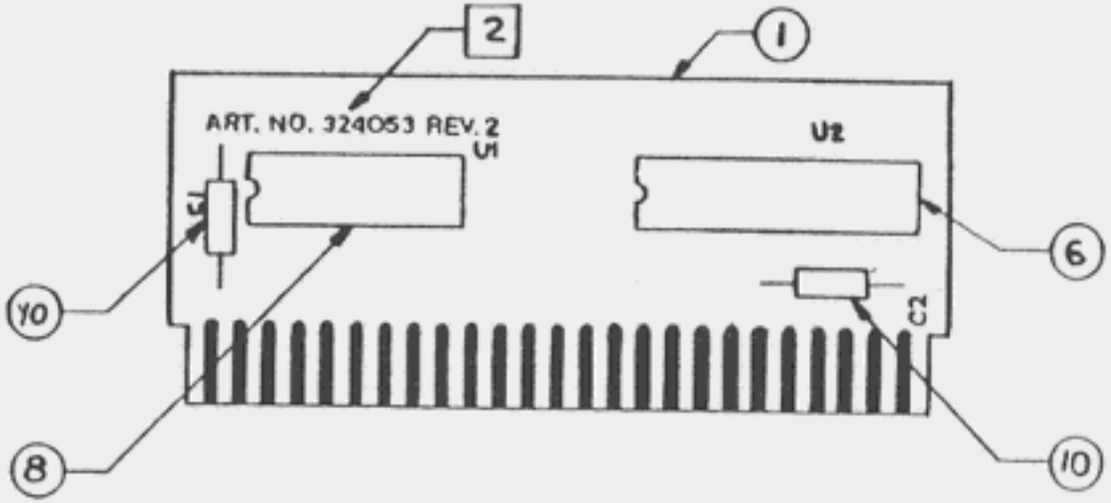

QUANTITY REQD PER PART / DASH NO. 01	ITEM	CS	PART NUMBER	DESCRIPTION	REF DES
1	1	B	324054-01	PCB FAB, MEMORY PROTECT	
	2				
REF	3	C	324055-01	LOGIC DIAGRAM, MEMORY PROTECT	
	4				
	5				
1	6	B	901889-01	I.C. 6702	U2
	7				
1	8	B	901521-16	I.C. 74LS138	U1
	9				
2	10	B	900461-28	CAP, CERAMIC AXIAL, .1µF, 50V	C1, 2
	11				

DRAWN BY: R W	DATE 8-25-81	commodore
CHKD: [illegible]	8-26-81	PCB ASSY MEMORY PROTECT
ENGR: [illegible]	8-27-81	
APPR:		
USED ON SUPER PET	NEXT ASSY 324042	SIZE B / 324056 / REV B
		SCALE 2/1 SHEET OF

REVISIONS				
LTR	ZONE	DESCRIPTION	DATE	APPROVED
A		PRODUCTION RELEASE		

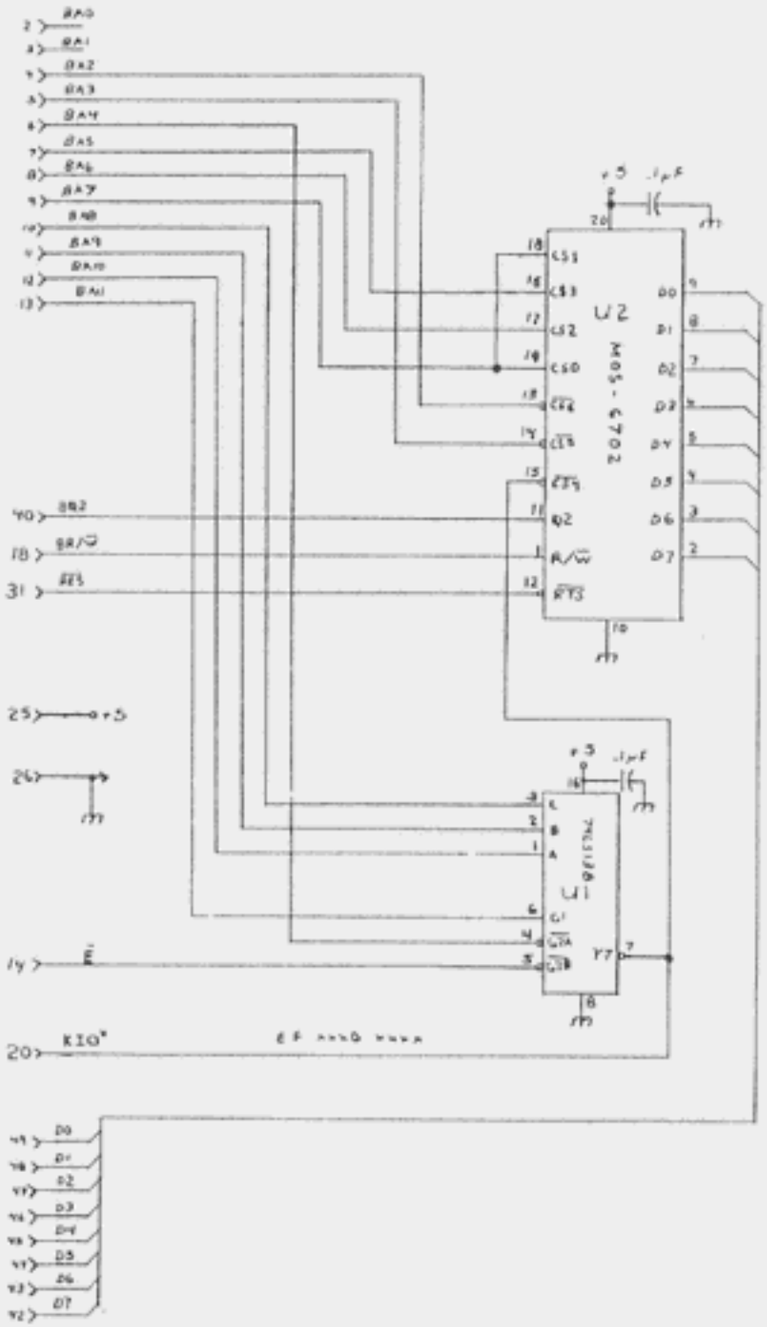

-01 SHOWN

UNLESS OTHERWISE SPECIFIED TOLERANCES ON DECIMALS	DRAWN BY R.W.	DATE	commodore
	CHKD	8-26-82	LOGIC DIAGRAM
	ENGR	8-27-82	
MATERIAL	USED ON SUPER PET	NEXT ASSY 324056	SIZE C 324055 REV A
FINISH			SCALE NONE SHEET 1 OF 1

ADVANCED REPRO

PART NO.	DESCRIPTION
9000007-01	PCB ASSY S.P. COMBO - 60 HZ

DWG NO 9000007

TITLE PCB ASSY S.P. COMBO

P/N 9000007

REVISIONS

LTR	ZONE	DESCRIPTION	DATE	APPROVED
A		PRODUCTION RELEASE	3/9/82	[illegible]
B		REV PER ECO 2566	[illegible]	[illegible]
C		REV PER ECO 2586	[illegible]	[illegible]
D		REVISED PER ECO 2621	[illegible]	[illegible]
E		REV PER ECO 2631	[illegible]	[illegible]
F		REV PER ECO 2650	[illegible]	[illegible]
G		REVISED PER ECO 2731	[illegible]	[illegible]
H		REVISED PER ECO 2807	8/31/82	[illegible]

1. SHEET 4 OF 4 SIZE D
ASSY DWG
NOTES-UNLESS OTHERWISE SPECIFIED:

commodore	DRAWN BY [illegible]	DATE 2-4-82	ENGR [illegible]	3.8.82	SIZE B	SHEET 1 OF 4
	CHKD [illegible]	2-10-82	APPR [illegible]	[illegible]		

QUANTITY REQD PER PART / DASH NO. 01	ITEM	DS	PART NUMBER	DESCRIPTION	REF DES		NOTES
R	1		9000008	PCB FABRICATION SUPER PET PCB			
R	2		9000016	SCHEMATIC DIAGRAM SUPER PET			
	3						
1	4		901521-02	IC,74LS04, HEX INVERTER	U1		
1	5		901525-01	,74S04, HEX INVERTER	U2		
1	6		901521-45	,74LS393,DUAL 4BIT BINARY COUNTER	U3		
1	7		901521-07	,74LS93,4BIT BINARY COUNTER	U4		
1	8		901519-01	,74LS11, TRIPLE 3INPUT POS.-AND GATES	U5		
1	9		901521-28	,74LS164,8BIT PARALLEL OUT SERIAL SHIFT REG.	U6		
2	10		901522-23	,74157, QUAD 2 TO 1 LINE DATE MUX	U10-U11		
1	11		901521-49	,74LS123, DUAL ONE-SHOT	U12		
1	12		901893-01	,6809E, CPU	U13		
2	13		901521-06	,74LS74, DUAL D-TYPE F-F	U14,U37		
1	14		901518-01	,74S37, QUADRUPLE 2INPUT NAND BUFFERS	U15		
1	15		901525-05	,74S08, QUADRUPLE 2INPUT AND GATES	U16		
1	16		901435-01	,6502, CPU	U17		
3	17		901521-47	,74LS367, HEX BUS DRIVERS	U18-U20		
1	18		901521-46	,74LS245 OCTAL BUS TRANSCEIVER	U21		
8	19		901505-01	64K × 1 DYNAMIC RAM	U22-U29		
2	20		901521-16	,74LS138 3 TO 8 DECODER	U30,U42		
1	21		901521-53	,74LS30 8INPUT POS.-NAND GATE	U31		
1	22		901521-04	,74LS20 DUAL 4INPUT POS.-NAND GATE	U32		
2	23		901521-31	,74LS32 QUADRUPLE 2INPUT POS.-OR GATE	U33,U34		
2	24		901521-42	,74LS273 OCTAL D F-F	U35,U36		
3	25		901521-11	,74LS157, QUAD 2 TO 1 LINE DATE MUX	U7-U9		
1	26		901524-07	,MC1489 RECEIVER	U38		
1	27		901524-06	,MC1488 LINE DRIVER	U39		
1	28		901895-01	,6551 ACIA	U40		
1	29		901889-01	,6702 SECURITY	U41		
1	30		901521-24	,74LS10 TRIPLE 3INPUT NAND GATES	U43		
1	31		901521-18	,74LS139 DUAL 2 TO 4 MUX	U44		
1	32		970018-12	64K ROM BINARY LISTING A000-BFFF	U47		
1	33		970019-12	64K ROM BINARY LISTING C000-DFFF	U48		
1	34		970020-12	64K ROM BINARY LISTING E000-FFFF	U49		
1	35		901521-03	,74LS08 QUADRUPLE 2INPUT AND GATES	U50		
–	36		970034-12	IC 64K ROM BINARY LISTING E000-FFFF	U49		
	37						

commodore

TITLE: PCB ASSY S.P. COMBO

DRWN BY:	DATE	ENGR:	DATE	SIZE		REV	SHT
E. Gallegos	2/9/82	R. Vinot	3 8 82		9000007	H	2/4
CHKD:	3-10-82	APPR:					

QUANTITY REQD PER PART / DASH NO. 01	ITEM	DS	PART NUMBER	DESCRIPTION	REF.	NOTES
2	38		901527-02	7805 VOLTAGE REGULATOR +5V	VR1 VR2	
	39					
	40					
4	41		902847-03	2N2222, TRANSISTOR NPN	Q1,Q2,Q4,Q5	
1	42		902704-01	2N4403, TRANSISTOR PNP	Q3	
	43					
10	44		901550-105	RESISTOR, CARBON 1/4W 5% 33Ω	R8-R17	
1	45		901550-38	510Ω	R7	
1	46		901550-31	680Ω	R21	
2	47		901550-01	1KΩ	,R4, R22	
2	48		901550-32	1.3KΩ	R19,R20	
1	49		901550-69	1.5KΩ	R6	
4	50		901550-02	3.3KΩ	R18,R24,R1,R5	
3	51		901550-12	22KΩ	R23,R2,R3	
2	52		901550-94	RESISTOR, CARBON 1/4W 5% 68Ω	R25,R26	
	53					
	54					
39	55		900461-16	CAP, CERAMIC 50V/.01 μF	C6-C41,C1-C3	
	56					
	57					
2	58		900109-01	CAP, ELECT. 25V/4.7μF	C4,C5	
	59					
	60					
3	61		904150-04	IC SOCKET, 24 PIN	XU45,U46,U49	
2	62		904150-06	IC SOCKET, 40 PIN	XU13,U17	
1	63		904150-08	IC SOCKET, 20 PIN	XU41	
1	64		900555-02	CRYSTAL, 1.8432 MHz	Y1	
	65					
1	66		903345-20	HEADER ASSY, DUAL ROW .100 CENTERS 40 PIN	J1	
1	67		903326-07	HEADER ASSY, 100 CENTERS 7 PIN	J2	REMOVE PIN 2
1	68		903326-01	HEADER ASSY, 1 PIN	J3	
1	69		903266-01	CONNECTOR RIGHT ANGLE RS-232	J4	
1	70		903327-07	HEADER ASSY .100 CENTER 7 PIN	J5 REMOVE PIN	3 & 4 AT ASSY
	71					
1	72		903025-01	FERRITE BEAD	FB1	
1	73		902913-01	HEATSINK		
	74					

commodore

TITLE: PCB ASSY S.P. COMBO

DRWN BY: S. Gallenzo DATE 2/4/82
CHKD: [illegible] DATE 3-10-82
ENGR: [illegible] DATE 3 8 82
APPR:

SIZE 9000007 REV H SHT 3/4

REVISIONS				
LTR	ZONE	DESCRIPTION	DATE	APPROVED
		SEE SHEET 1		

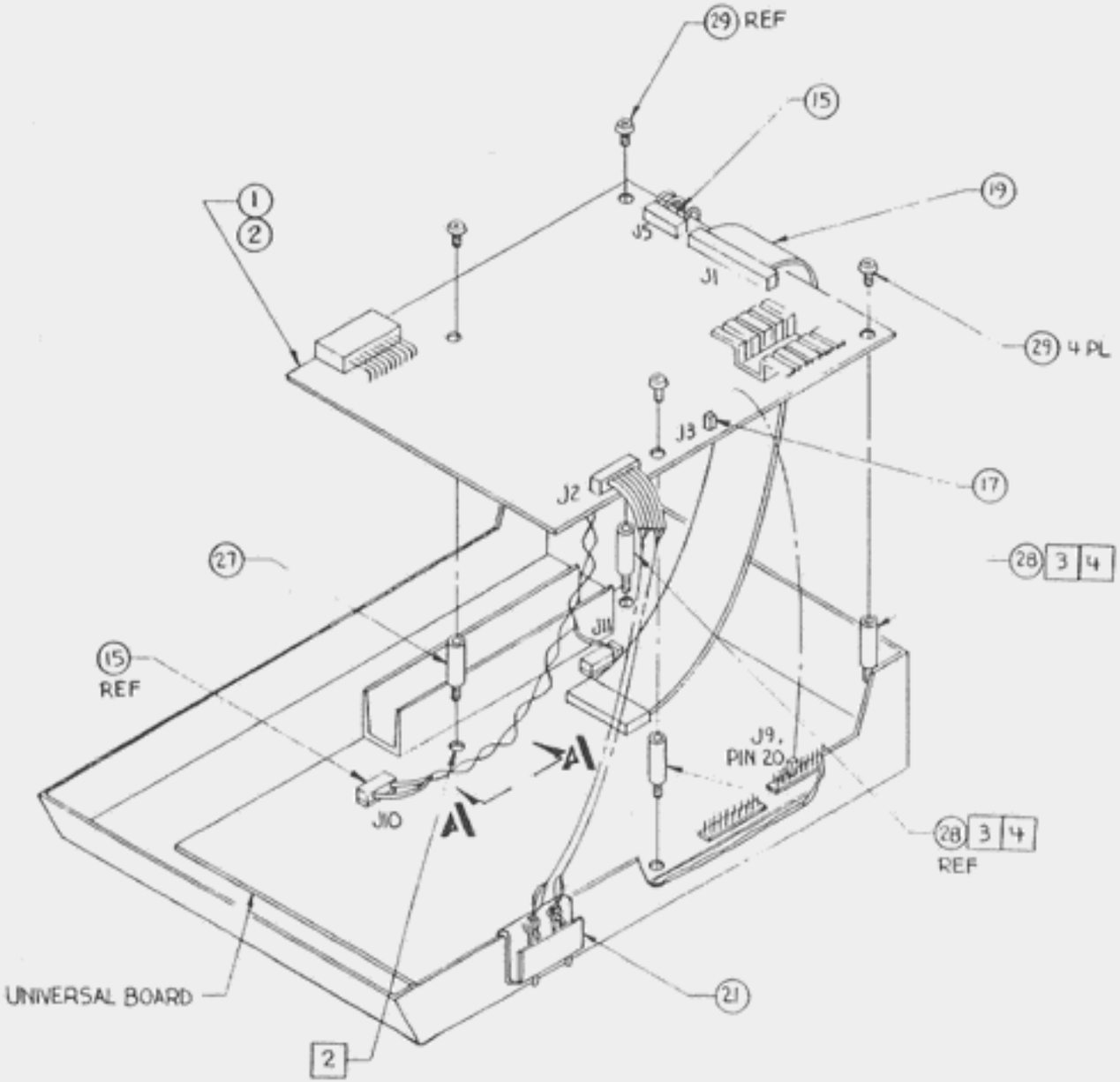

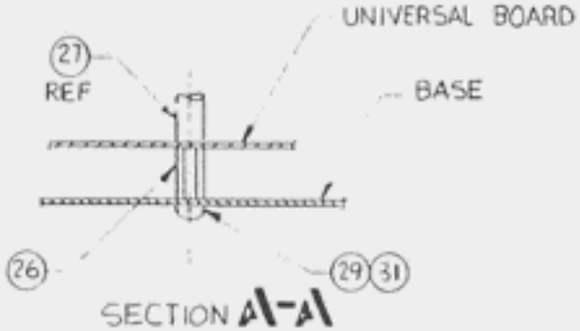

UNLESS OTHERWISE SPECIFIED TOLERANCES ON DECIMALS	DRAWN BY / CHKD / ENGR / APPR	DATE 3-15-82	commodore
MATERIAL / FINISH	USED ON / NEXT ASSY		8032/4032 CARPET COLOR CONVERSION KIT
		SIZE C	9000035 REV B
		SCALE NONE	SHEET 3 OF 7

REVISIONS				
LTR	ZONE	DESCRIPTION	DATE	APPROVED
A		PRODUCTION RELEASE		
B		REV PER ECO 2376		

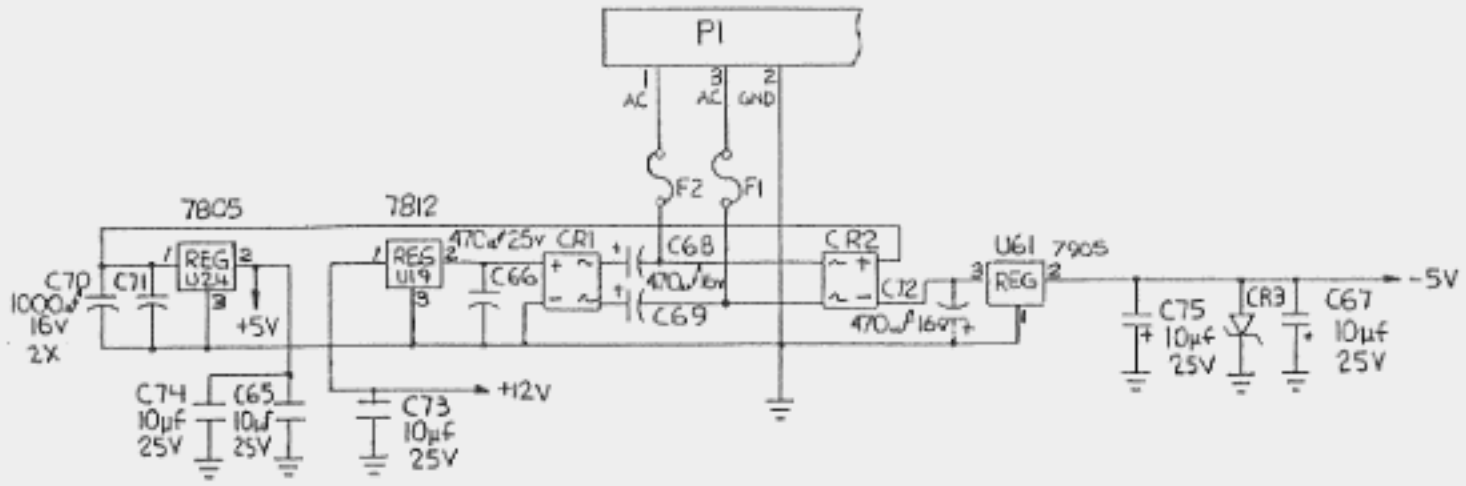

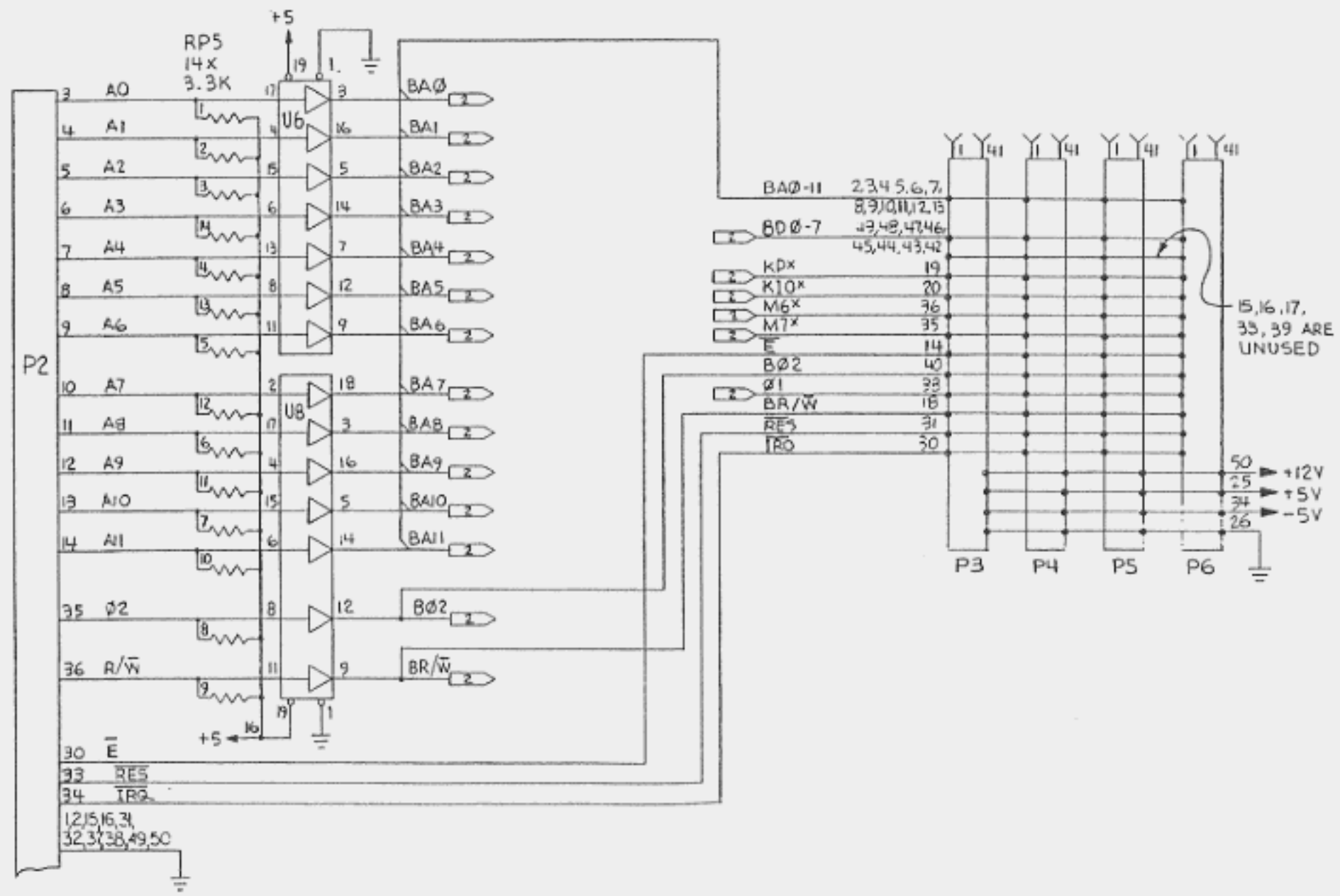

2. CAPACITOR VALUES ARE IN MICROFARADS, 50V.

1. RESISTOR VALUES ARE IN OHMS, ¼W, ± 5%.

NOTES-UNLESS OTHERWISE SPECIFIED:

UNLESS OTHERWISE SPECIFIED TOLERANCES ON DECIMALS	DRAWN BY	DATE 6-15-81
	CHKD	7-27-81
	ENGR	1-21-82
	APPR	
MATERIAL	USED ON SUPERPET	NEXT ASSY 9000003
FINISH		

commodore

SCHEMATIC
COMPU/THINK

SIZE D | 324041 | REV B

SCALE NONE | SHEET 1 OF 3

REVISIONS				
LTR	ZONE	DESCRIPTION	DATE	APPROVED
		SEE SHEET 1		

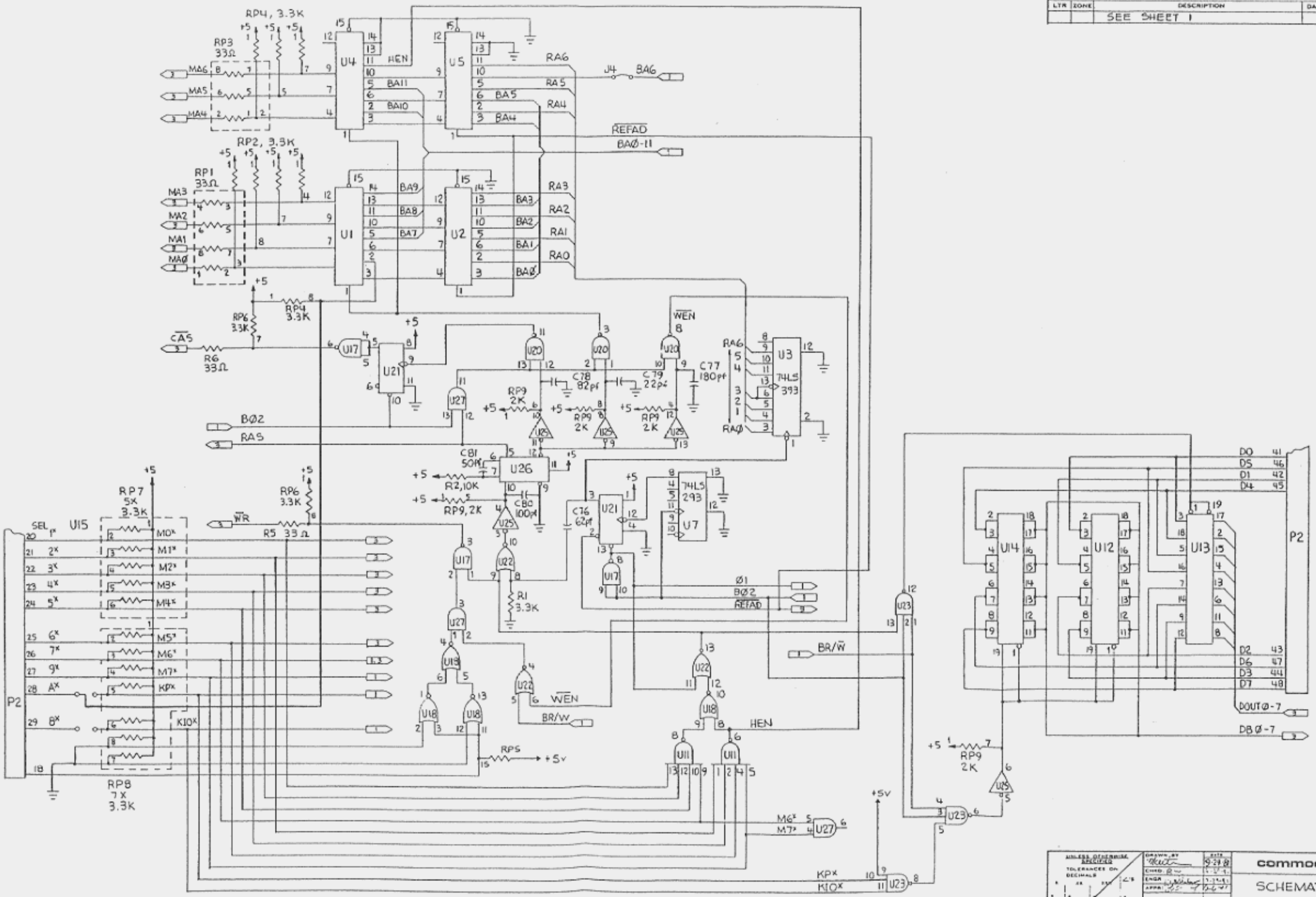

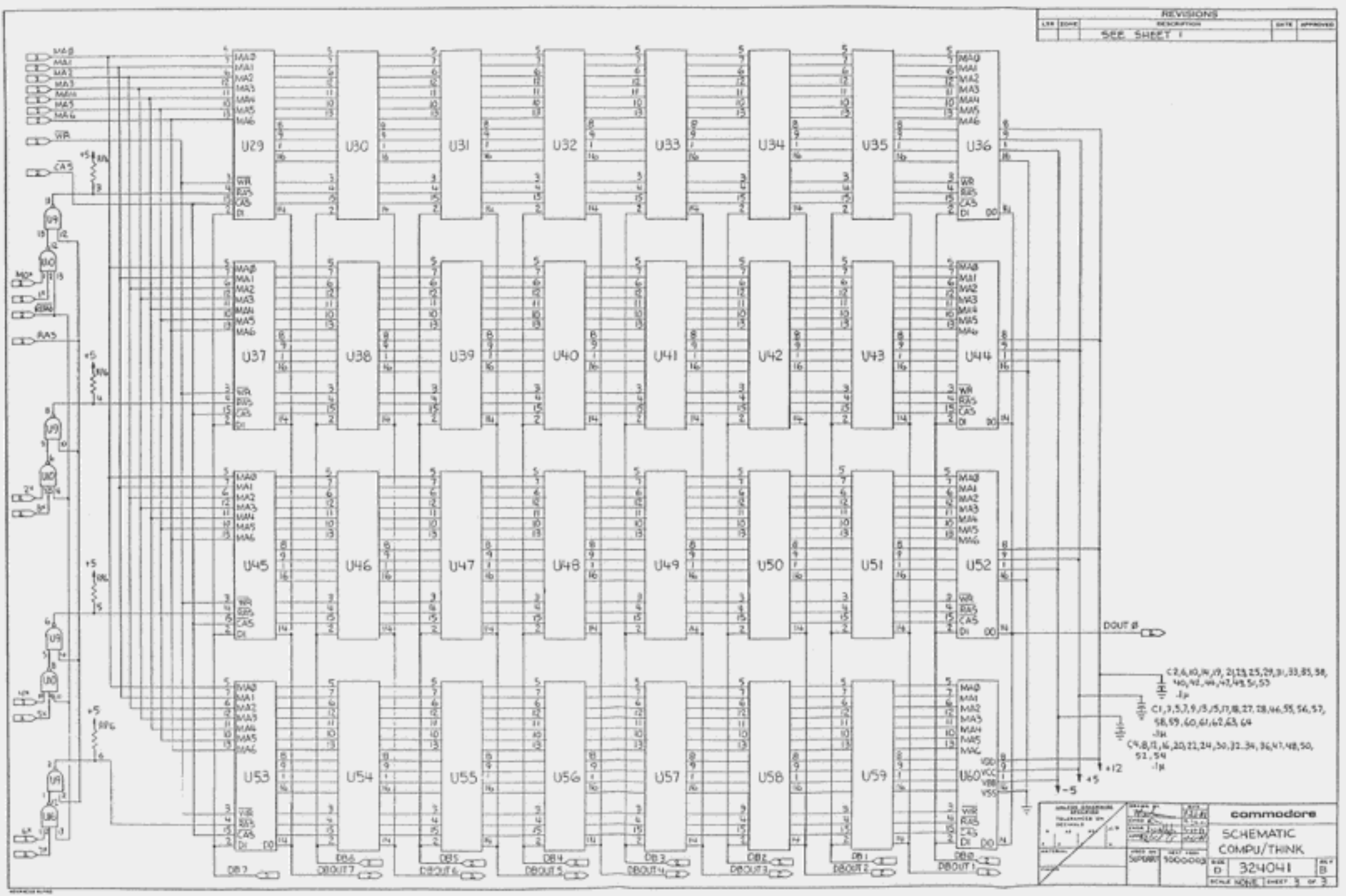
REVISIONS
SEE SHEET 1
MA0
MA1
MA2
MA3
MA4
MA5
MA6
WR
CAS
RAS
U29
U30
U31
U32
U33
U34
U35
U36
U37
U38
U39
U40
U41
U42
U43
U44
U45
U46
U47
U48
U49
U50
U51
U52
U53
U54
U55
U56
U57
U58
U59
U60
DOUT 0
+12
+5
-5
DB7
DB6
DB5
DB4
DB3
DB2
DB1
DB0
DOUT7
DOUT6
DOUT5
DOUT4
DOUT3
DOUT2
DOUT1
commodore
SCHEMATIC
COMPU/THINK
D
324041
B
SCALE NONE
SHEET 3 OF 3

REVISIONS					
LTR	ZONE	DESCRIPTION	DATE	APPROVED	
C		REV PER ECO 2621			
D		REV PER ECO 2631			
E		REV PER ECO 2731			
A		PRODUCT ON RELEASE			
B		REV PER ECO 2577			

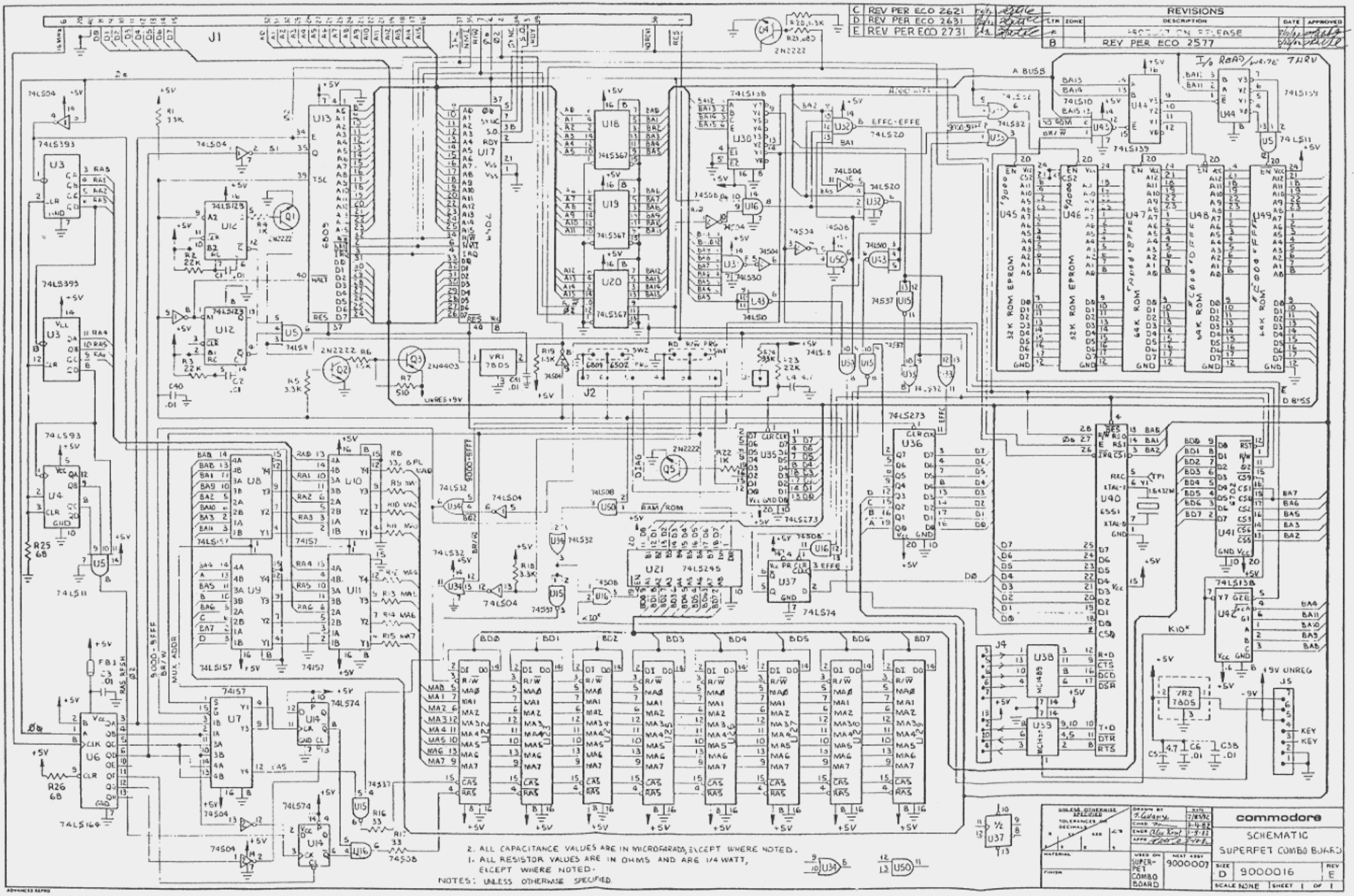

PART NO.	DESCRIPTION
8032090-01	UNIV. DYNAMIC PET 8032-60Hz
-03	4032-60Hz (12")
-05	4016-60Hz
-07	UNIV. SUPER PET 9000 - 60 Hz
-09	UNIV. SUPERPET, COMBO-BRD 9000 - 60 Hz
8032090 - 11	UNIV. DYNAMIC PET, 4032-9" - 60 Hz

REVISIONS

LTR	ZONE	DESCRIPTION	DATE	APPROVED
A		PRODUCTION RELEASE	6/23/81	
B		REV PER ECO 2157	7/14/81	
C		REV PER ECO 2172	8/6/81	
D		REV PER ECO 2237	8/21/81	
D		REV PER ECO 2308	9/28/81	
E		REV PER ECO 2368	11/4/81	
E		PER ECO 2414	12/9/81	
F		REV PER ECO 2565 & 2555	3/4/82	
G		REVISED PER ECO 2887		
H		REVISED PER ECO 3027		

[9] REWORK INSTRUCTIONS FOR FCC: JUMPER WIRE FROM UD3 PIN 1 TO UB14 PIN 35. USE 22 AWG (IT. 108). THIS CONFIGURATION IS FOR -09 & -10 ONLY.

[8] UD11 & 12 NOT FOR -07, -08, -09 & -10

[7] IDENTIFY WITH APPLICABLE DASH NO.

[6] SOLDER TO XTAL AND PCB.

[5] FOR ITEMS 118 & 119, ALL ASSEMBLIES MUST HAVE SAME VENDOR.

[4] SOLDER JUMPER, ITEM 106 FROM E1 TO SILVER CONTACT ON MT1, ITEM 73; TAKE CARE TO ALLOW NO MOVE THAN ONE SECOND DURATION FOR APPLICATION OF HEAT DURING SOLDERING.

[11] CUT PINS 9 & 10 AT UE7. CONNECT PIN 9 TO GND.

[10] CONNECT ITEM 43 FROM PIN 15 OF UA19 TO VCC (+5V).

[4] REFER TO PART SUBSTITUTION INDEX, P/N 321233.

[3] SOLDER AT 3 PLACES, EQUALLY SPACED AROUND THE BRASS BASE MT1 (ITEM 73)

[2] IDENTIFY WITH APPLICABLE DASH NO.

1. SHEET 6 OF 7 SIZE C, SHEET 7 OF 7 SIZE D.

NOTES: UNLESS OTHERWISE SPECIFIED:

commodore	TITLE: PCB ASSY - UNIV. DYNAMIC PET	DRAWN BY	DATE 7-11-81	ENGR		SIZE B	DRAWING NUMBER 8032090
		CHKD	6-17-81	APPR			SHEET OF 7

QUANTITY REQD PER PART / DASH NO. 11	10	09	08	07	06	05	04	03	02	01	ITEM	DS	PART NUMBER	DESCRIPTION	REF DES	BEND	NOTES
1		1		1		1		1		1	1	D	8032088-01	FABRICATION-UNIV. DYNAMIC PET			
REF		REF		REF		REF		REF		REF	2	D	8032087-01	LOGIC DIAGRAM-UNIV. DYNAMIC PET			
-		1		1		-		-		-	3	B	901640-01	IC 2332	UA3		
3		3		3		3		3		3	4	B	901521-01	74LS00	UD5,UE5,UE11		
3		3		3		3		3		3	5	B	901521-24	74LS10	UD4,UE7,UE13		
1		1		1		1		1		1	6	B	901522-20	7425	UE14		
1		1		1		1		1		1	7	B	901521-02	74LS04	UE15		
1		1		1		1		1		1	8	B	901523-01	LM555	UD16		
1		1		1		1		1		1	9	B	901522-01	7417	UD15		
1		-		-		1		1		1	10	B	901435-01	6502	UB14		
1		1		1		1		1		1	11	B	901479-01	CRT CONTROLLER	UB13		
1		1		1		1		1		1	12	B	901522-13	74154	UE12		
2		2		2		2		2		2	13	B	901436-01	6520	UB12,UB16		
3		3		3		3		3		3	14	B	901524-01	MC3446	UA20,UB17,UC12		
1		1		1		1		1		1	15	B	901437-01	6522	UB15		
1		1		1		1		1		1	16	B	901521-09	74LS145	UC11		
2		2		2		2		2		2	17	B	901521-45	74LS393	UD3,UE6		
1		1		1		1		1		1	18	B	901521-21	74LS02	UD1		
2		2		2		2		2		2	19	B	901525-09	74S74	,UC1,UE1		
2		2		2		2		2		2	20	B	901525-01	74S04	UD2,UE4		
2		2		2		2		2		2	21	B	901521-06	74LS74	UB2,UB1		
1		1		1		1		1		1	22	B	901522-28	74166	UA2		
1		-		-		1		1		1	23	B	901447-10	2316	UA3		
1		1		1		1		1		1	24	B	901521-32	74LS86	UC2		SEE NOTE 4
1		1		1		1		1		1	25	B	901521-28	74LS164	UE3		SEE NOTE 4
1		1		1		1		1		1	26	B	901521-16	74LS138	UC3		
4		4		4		4		4		4	27	B	901521-11	74LS157	UC8-UC10,UE2		SEE NOTE 4
											28						
											29						
1		1		1		1		1		1	30	B	901465-22	2332	UD6		
1		1		1		1		1		1	31	B	901465-21	2332	UD8		
1		1		1		1		1		1	32	B	901465-20	2332	UD9		
1		1		1		1		1		1	33	B	901465-23	2332	UD10		
											34						
1		1		1		1		1		1	35	B	901522-04	IC 7400	UF1		
1		1		1		1		1		1	36	B	900110-07	CAP, LOW LEAK. ELECT. 1µF 50V	C10		
56		56		56		56		56		56	37	B	900461-28	CAP, CERAMIC AXIAL .1µF 50V	C12-15,18-20-22,25-28,30-50,53,55-59,62-72,75,87,89,90,95,96		

commodore

TITLE: PCB ASSY-UNIV. DYNAMIC PET

DRAWN BY: DATE 3-11-81 CHKD: DATE 6/7/81 ENGR: DATE APPR:

SIZE B 8032090 REV H SHT 2/7

QUANTITY REQD PER PART / DASH NO. 11	10	09	08	07	06	05	04	03	02	01	ITEM	BS	PART NUMBER	DESCRIPTION	REF DES	BEND	NOTES
3		3		3		3		3		3	38	B	900461-16	CAP, CERAMIC AXIAL .01µF 50V	C52,60,61		
2		2		2		2		2		2	39	B	900461-20	,CERAMIC AXIAL .022µF 50V	C3,4		
1		1		1		1		1		1	40	B	900100-45	,ELECTROLYTIC 4700µF 25V	C5		
1		1		1		1		1		1	41	B	900100-44	,ELECTROLYTIC 470µF 16V	C2		
5		5		5		5		5		5	42	B	900109-03	,LOW LEAK.ELECT. 10µF 25V	C1,16,17,23,24		SEE NOTE 4
1		1		1		1		1		1	43	B	900050-21	,DIPPED MICA, RADIAL, 82pF, 500V	C97		SEE NOTE 10
2		2		2		2		2		2	44	B	900402-13	,TANTALUM 1µF 35V	C6, ,51		
2		2		2		2		2		2	45	B	900101-37	,ELECTROLYTIC 47µF 16V	C7,11		
1		1		1		1		1		1	46	B	900463-08	,CERAMIC AXIAL 820 pF	C92		
14		14		14		14		14		14	47	B	900462-29	CAP ,CERAMIC AXIAL 47pF	C74-C86, C88		
											48						
2		2		2		2		2		2	49	B	901550-84	RES, CARBON 1/4W 5% 1M	R24,25		
3		3		3		3		3		3	50	B	901550-58	470Ω	R13,16,17		
4		4		4		4		4		4	51	B	901550-94	68Ω	R10,11,46,49		
2		2		2		2		2		2	52	B	901550-03	5.1K	R19,21		
2		2		2		2		2		2	53	B	901550-85	2.4K	R18,20		
1		1		1		1		1		1	54	B	901550-64	10Ω	R8		
2		2		2		2		2		2	55	B	901550-20	10K	R23,27		
2		2		2		2		2		2	56	B	901550-69	1.5K	R47,48		
8		8		8		8		8		8	57	B	901550-49	100Ω	R[illegible]		
1		1		1		1		1		1	58	B	901550-19	4.7K	R51		
1		1		1		1		1		1	59	B	901550-18	2.2K	R53		
2		2		2		2		2		2	60	B	901550-[illegible]	47Ω	R50,52		
											61						
											62	B					
											63	B					
1		1		1		1		1		1	64	B	901550-93	39Ω	R7		
16		16		16		16		16		16	65	B	901550-01	1K	R1-6,12,15,22,26,28,39,42-45		
1		1		1		1		1		1	66	B	901550-02	,CARBON 1/4W 5% 3.3K	R14		
1		1		1		1		1		1	67	B	902419-66	RES, NETWORK, DIP 14 PIN 10K	UB11		
											68						
2		2		2		2		2		2	69	B	902653-01	TRANSISTOR, TIP 29	Q1,Q2		
1		1		1		1		1		1	70	B	902550-01	TRANSISTOR, PACK Q2T2222	UQ10		
											71						
											72						
1		1		1		1		1		1	73	B	901300-02	TRANSDUCER PIEZO ACOUSTIC	MT1		
											74						

commodore

TITLE: PCB ASSY-UNIV. DYNAMIC PET

DRAWN BY: [illegible] DATE: [illegible]

CHKD: [illegible] DATE: [illegible]

ENGR: APPR: DATE:

SIZE B 8032090 REV 11 SHT 3/7

QUANTITY REQD PER PART / DASH NO. 11	10	09	08	07	06	05	04	03	02	01	ITEM	IS	PART NUMBER	DESCRIPTION	REF DES	BEND	NOTES
											75						
3		3		3		3		3		3	76	B	900750-05	DIODE, 1N4005	CR1,5,7		
2		2		2		2		2		2	77	B	900757-01	, BRIDGE 4A/50V	CR2,4		SEE NOTE 4
1		1		1		1		1		1	78	B	900753-01	, 1N5402 3A/200V	CR3		
											79						
											80						
2		2		2		2		2		2	81	B	900941-01	DIODE, ZENER 7.5V	VR5,6		
											82						
1		1		1		1		1		1	83	B	901527-03	VOLTAGE REGULATOR, 7905, -5V/1.5A	VR1		TO-220
											84						
1		1		1		1		1		1	85	B	901528-04	VOLTAGE REGULATOR, 7812, +12V/1A	VR2		TO-3
1		1		1		1		1		1	86	B	901528-01	VOLTAGE REGULATOR, LM323	VR4		
											87						
1		1		1		1		1		1	88	B	900556-02	CRYSTAL 16MHZ	Y1		
											89						
1		1		1		1		1		1	90	B	903326-07	HEADER ASSY .100 CENTER	J10		7 PIN; REMOVE PIN 3 AT ASSEMBLY
2		2		2		2		2		2	91	B	903345-25	HEADER ASSY, DUAL ROW .100 CENTER	J4,9		50 PIN
1		1		1		1		1		1	92	B	903316-09	HEADER ASSY .156 CENTER	J8		9 PIN; REMOVE PIN 7 AT ASSEMBLY
1		1		1		1		1		1	93	B	903331-07	HEADER ASSY, POLARIZED .100 CENTER	J11		7 PIN; REMOVE PIN 3 AT ASSEMBLY
1		1		1		1		1		1	94	B	903331-07	HEADER ASSY, POLARIZED .100 CENTER	J7		7 PIN; ORIENT OMITTED PIN TO PIN 6 POSITION
1		1		1		1		1		1	95	B	903331-20	HEADER ASSY, POLARIZED .100 CENTER	J5		20 PIN; ORIENT OMITTED PIN TO PIN 19 POSITION
											96						
4		2		2		4		4		4	97	B	904150-04	SOCKET, IC LOW PROFILE 24 PIN	UA3, UD7, UD11, UD12		SEE NOTE 8
1		1		1		1		1		1	98	B	904150-06	SOCKET, IC LOW PROFILE 40 PIN	UB14		
1		1		1		1		1		1	99		904150-01	SOCKET IC LOW PROFILE 14 PIN	UF1		
2		2		2		2		2		2	100	B	901151-17	COIL, INDUCTOR 2.2uh	L1, L2		
1		1		1		1		1		1	101	B	320086-02	BUS WIRE			
											102						
4		4		4		4		4		4	103	B	906403-19	RIVET, DOME HEAD, OPEN END			
2		2		2		2		2		2	104	B	906404-04	RIVET, DOME HEAD, CLOSED END			
											105						
1		1		1		1		1		1	106	B	903780-01	#30 WIRE WRAP WIRE, RED			
20		20		20		19		20		20	107	B	903781-01	22 AWG BARE WIRE ON TAPE & REEL			
–		1/2		1/2		–		–		–	108	B	903755-03	WIRE, INSULATED, 22 AWG, 12.5 LG			
1		1		1		1		1		1	109	B	320268-01	HEAT SINK			
A/R		A/R		A/R		A/R		A/R		A/R	110	B	904907-01	HEAT SINK, COMPOUND THERMAL			
											111						

commodore

TITLE: PCB ASSY-UNIV. DYNAMIC PET

DRAWN BY: DATE 3-11-81 CHKD BY: DATE 6-17-81 ENGR: DATE APPR: SIZE B 8032090 REV H SHT 4/7

QUANTITY REQD PER PART / DASH NO. 11	10	09	08	07	06	05	04	03	02	01	ITEM	BS	PART NUMBER	DESCRIPTION	REF DES	BEND	NOTES
–		11		11		–		–		11	112	B	901521-13	IC, 74LS244	UB4-UB7, UB9, UB10, UD13, UD14, UE8-UE10		
9		–		–		9		9		–	113	B	901521-13	, 74LS244	UB4, UB5, UB9, UB10, UD13, UD14, UE8-UE10		
–		2		2		–		–		2	114	B	901521-29	, 74LS373	UB3, UB8		
1		–		–		1		1		–	115	B	901521-29	, 74LS373	UB3		
–		4		4		–		–		4	116	B	901453-02	, 2114	UC4-UC7		
2		–		–		2		2		–	117	B	901453-02	, 2114	UC4, UC5		
16		16		16		–		16		16	118	B	901470-01	, 4116	UA4-UA19		
–		–		–		8		–		–	119	B	901470-01	, 4116	UA5, UA7, UA9, UA11, UA13, UA15, UA17, UA19		
–		1		1		–		–		1	120	B	901474-03	, 2316	UD7		
–		–		–		–		–		–					UD7		
–		–		–		1		1		–	122	B	901499-01	, 2316	UD7		
–		–		–		–		–		–					UD7		
1		–		–		–		–		–	124	B	970150-07	IC, 2516 EPROM	UD7		
											125						
28		28		28		28		28		28	126	B	903025-01	FERRITE BEAD	FB1-26, 28, 29		
1		1		1		1		1		1	127	B	4022048-01	SHIELD BOX			
1		1		1		1		1		1	128	B	4022047-01	SHIELD CAP			
											129						
1		1		1		1		1		1	130	B	900461-22	CAP CERAMIC AXIAL, .033 µF, 50V	C94		
1		1		1		1		1		1	131	B	900461-24	CAP, CERAMIC AXIAL, .047 µF, 50V	C93		
1		1		1		1		1		1	132	B	900463-04	CAP, CERAMIC AXIAL, 100 pF, 50V	C91		
											133						
											134						
											135						
											136						
											137						
											138						
											139						
											140						
											141						
											142						
											143						
											144						
											145						
											146						
											147						
											148						

commodore

TITLE: PCB ASSY-UNIV. DYNAMIC PET

DRAWN BY: DATE 3-11-81
CHKD: DATE 6-17-81
ENGR: DATE
APPR:

SIZE B | 8032090 | REV H | SHT 5/7

PART NO.	DESCRIPTION
8032051-01	POWER SUPPLY ASSY, 8032 117V UL

REVISIONS

LTR	ZONE	DESCRIPTION	DATE	APPROVED
A		PRODUCTION RELEASE	8/24/80	[illegible]
B		REV PER ECO 1935	3/5/81	[illegible]
C		REV PER ECO 2028	7/8/81	[illegible]
D		REV PER ECO 2284	10/8/81	[illegible]
E		REV. PER ECO 2777	8/13/82	[illegible]

[6] REFER TO PART SUBSTITUTE INDEX P/N 321233.

[5] SWITCH SHOWN IN 'OFF" POSITION.

4. ALL LEADS WILL HAVE A MINIMUM OF ONE WRAP AROUND TERMINALS PRIOR TO SOLDERING.

[3] IDENTIFY WITH COMMODORE PART NO. 8032051 AND APPLICABLE DASH NO. LOCATE APPROX AS SHOWN.

[2] DASH 04 CONFIGURATION SHALL BE USED FOR VDE, SEV & SEMKO.

1. SHEET 3 OF 3 SIZE D
ASSY DWG

NOTES - UNLESS OTHERWISE SPECIFIED:

commodore	TITLE POWER SUPPLY ASSY, 8032	DRAWN BY L CHRISTENSEN	DATE 4-22-80	ENGR		SIZE B	DRAWING NUMBER 8032051
		CAD FORMAT N.P. SPK ONLY	9-19-84	APPR.			SHEET 1 OF 3

BISHOP GRAPHICS/ACCUPRESS REORDER NO. A 1848

QUANTITY REQD PER PART / DASH NO.			ITEM	SS	PART NUMBER	DESCRIPTION	REF DES	BEND	NOTES
			01						
			1						
		1	2	D	8032043-02	CHASSIS, POWER, UNIVERSAL			
		1	3	C	320902-01	TRANSFORMER	T1		SEE NOTE 6 FOR SUBSTITUTE
			4						
			6						
		1	7	B	900102-01	CAPACITOR 23,000 MFD	C1		
			8						
		1	9	B	903467-03	FILTER POWER CONNECTOR			
			11						
			12						
			13						
		1	14	B	320289-01	DYNAMIC PET POWER HARNESS			
			15						
		1	16	B	903557-04	FUSE, 125V SLO-BLO 1.6A	F1		
			18						
			19						
		1	20	B	903611-03	FUSE HOLDER	XF1		FOR SUBSTITUTE SEE NOTE 6
		1	21	B	904507-01	SWITCH, ROCKER	SW1		
			22						
			23						
			24						
		5	25	B	320479-02	TUBE, SHRINKABLE			
		3	26	B	320478-01	TUBE, SHRINKABLE			
		2	27	B	320059-01	LEAD WIRE (BLACK)			
			28						
		1	30	B	903612-02	FUSE CARRIER			FOR SUBSTITUTE SEE NOTE 6
		2	31	B	906630-03	SCREW, PAN HEAD, #10-32 x .250 LG			
		2	32	B	905650-03	WASHER, LOCK, INT TOOTH #10			
			33						
		1	34	C	320925-05	GROUND CABLE ASSY			
		2	35	B	906600-06	SCREW PAN HEAD #4-40 x .438 LG			
		2	36	B	905970-05	NUT KEPS #4-40			
			37						

commodore

TITLE: POWER SUPPLY ASSY, 8032

DRAWN BY: K. CHRISTENSEN 4/22/80
CHKD: N.P. 6-19-80
ENGR:
APPR:
DATE
SIZE B
8032051
REV E
SHT 2/3

REVISIONS				
LTR	ZONE	DESCRIPTION	DATE	APPROVED
		SEE SHEET 1		

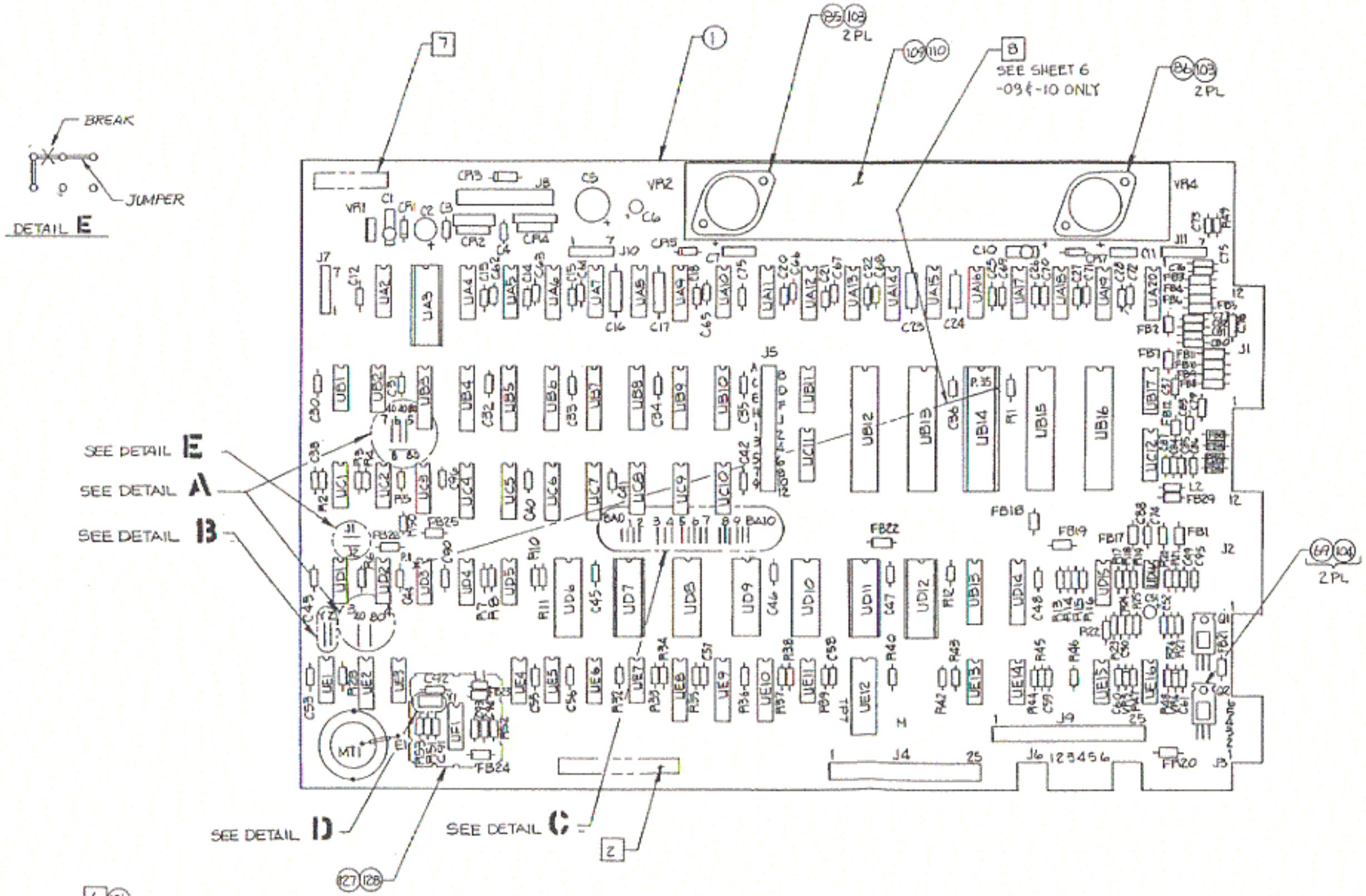

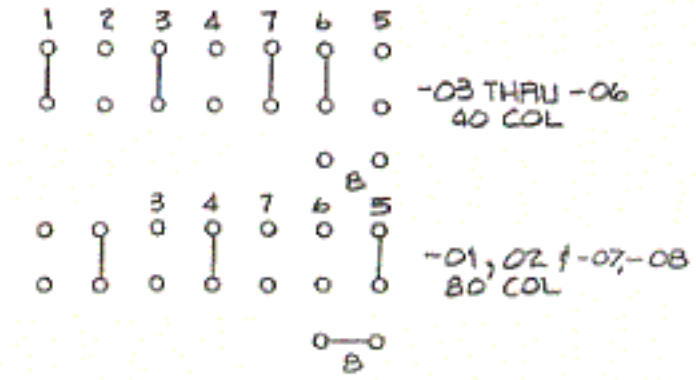

DETAIL A
SCALE = NONE
JUMPER CONFIGURATIONS

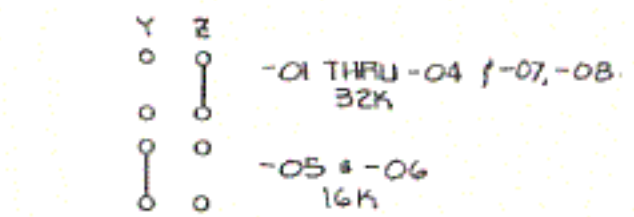

DETAIL B
SCALE: NONE

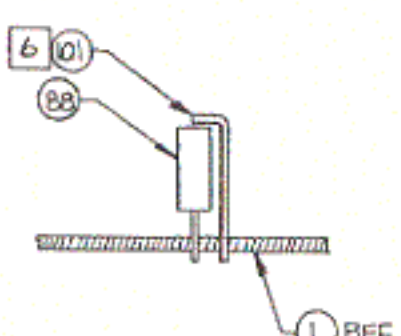

DETAIL D
SCALE: NONE

DETAIL C
SCALE: NONE
JUMPER CONFIGURATIONS

-01 THRU -10 SHOWN

UNLESS OTHERWISE SPECIFIED TOLERANCES ON DECIMALS	DRAWN	DATE 7-6-81
	CHKD	6-17-81
	ENGR	
	APPR	
MATERIAL	USED ON	NEXT ASSY
FINISH		

commodore

PCB ASSY - UNV. DYNAMIC PET

SIZE D | 8032090 | REV H

SCALE 1/1 | SHEET 7 OF 7

REVISIONS				
LTR	ZONE	DESCRIPTION	DATE	APPROVED
A		PRODUCTION RELEASE		
B		REV PER ECO 2573		
C		REV PER ECO 2617		

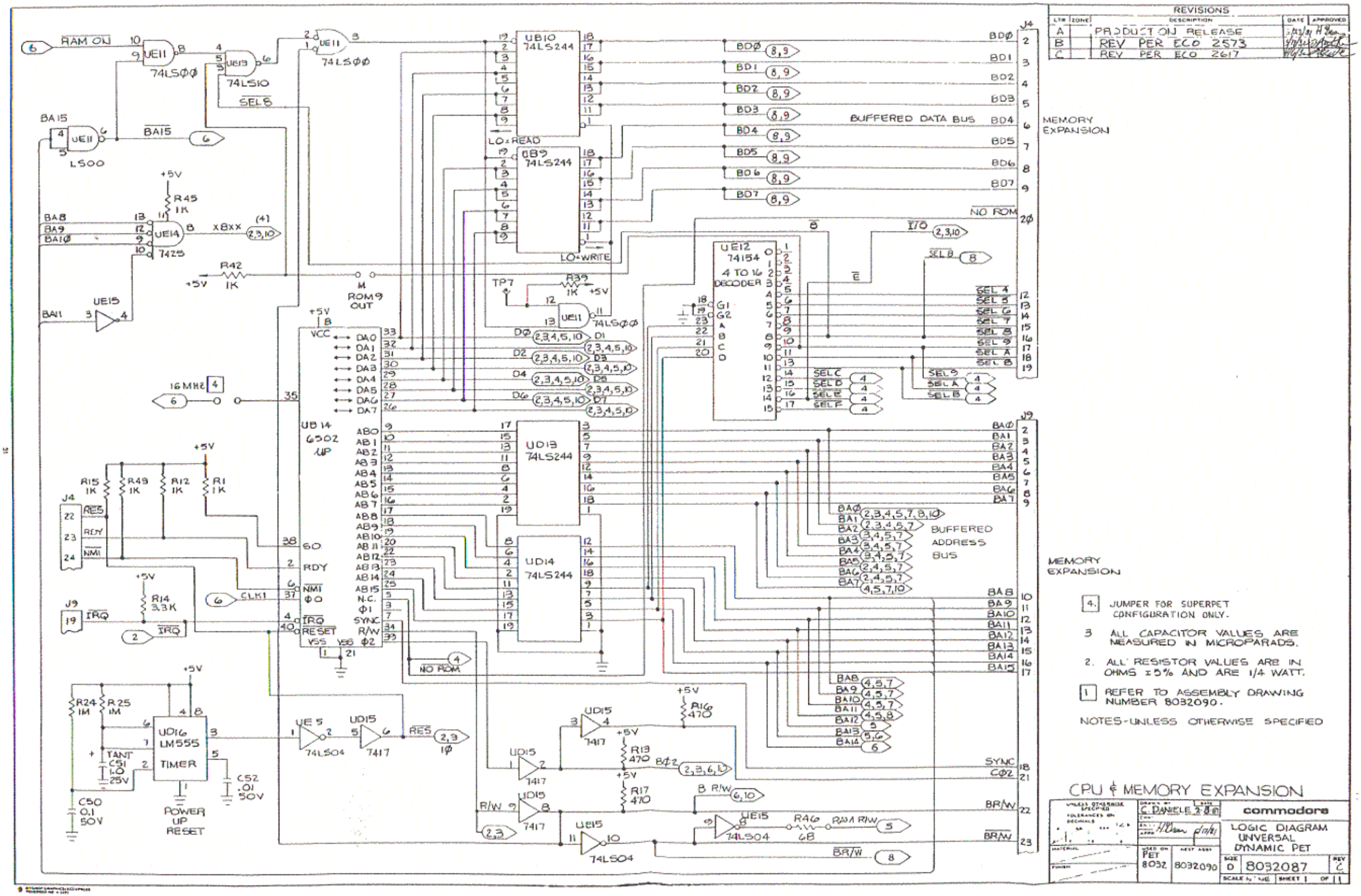

MEMORY EXPANSION

4. JUMPER FOR SUPERPET CONFIGURATION ONLY.

3 ALL CAPACITOR VALUES ARE MEASURED IN MICROFARADS.

2. ALL RESISTOR VALUES ARE IN OHMS ±5% AND ARE 1/4 WATT.

1 REFER TO ASSEMBLY DRAWING NUMBER 8032090.

NOTES-UNLESS OTHERWISE SPECIFIED

CPU & MEMORY EXPANSION

DRAWN BY C. DANIELE 2-8-8	commodore	
USED ON PET 8032	NEXT ASSY 8032090	LOGIC DIAGRAM UNIVERSAL DYNAMIC PET
		SIZE D 8032087 REV C
		SCALE NONE SHEET 1 OF 1

REVISIONS				
LTR	ZONE	DESCRIPTION	DATE	APPROVED

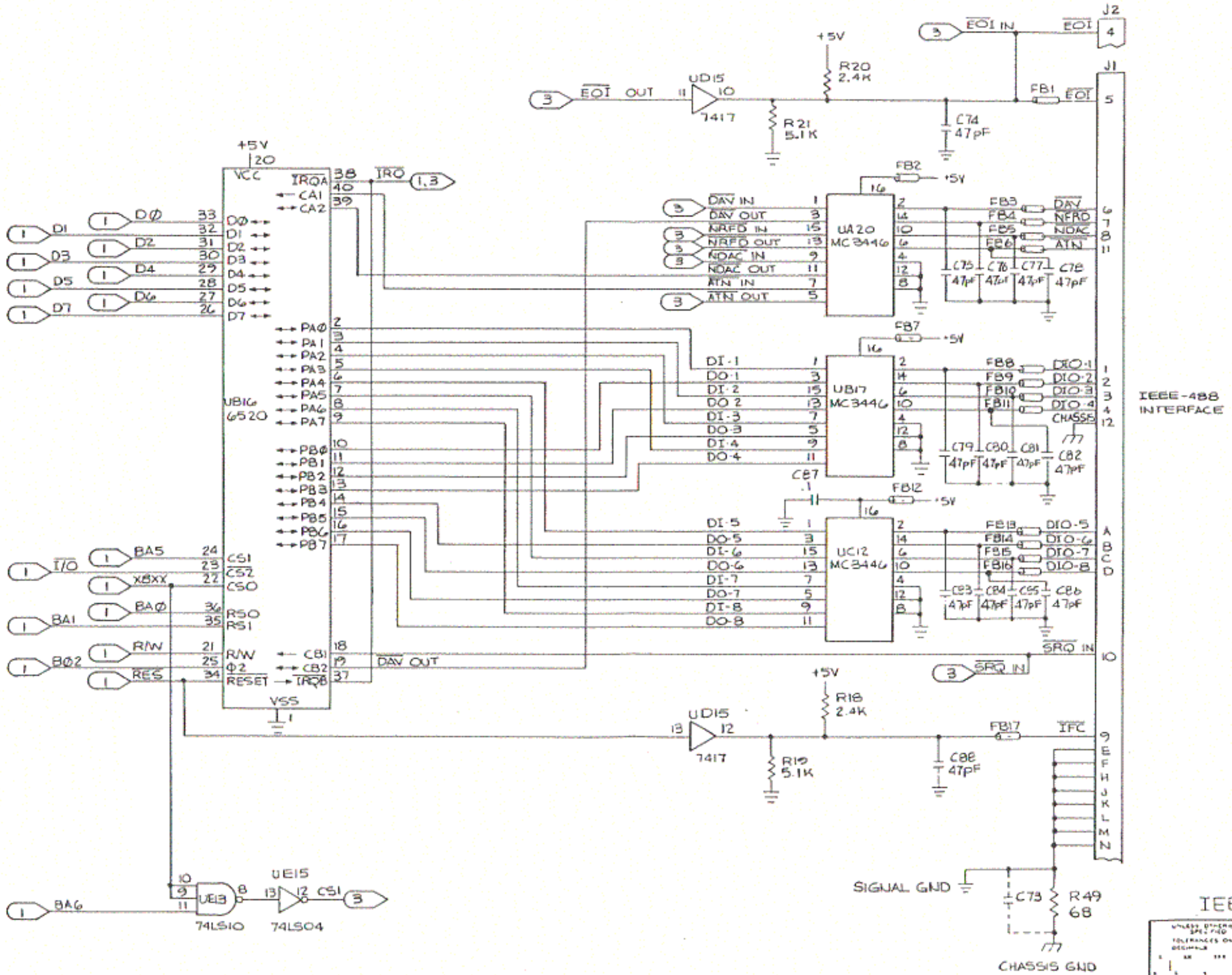

IEEE - 488 INTERFACE

UNLESS OTHERWISE SPECIFIED TOLERANCES ON DECIMALS	DRAWN BY C. DANIELE	DATE 1-8-81	commodore
			LOGIC DIAGRAM UNIVERSAL DYNAMIC PET
MATERIAL	USED ON	NEXT ASSY	SIZE D 8032087 REV C
FINISH			SCALE NONE SHEET 2 OF 11

REVISIONS				
LTR	ZONE	DESCRIPTION	DATE	APPROVED
		SEE SHEET 1		

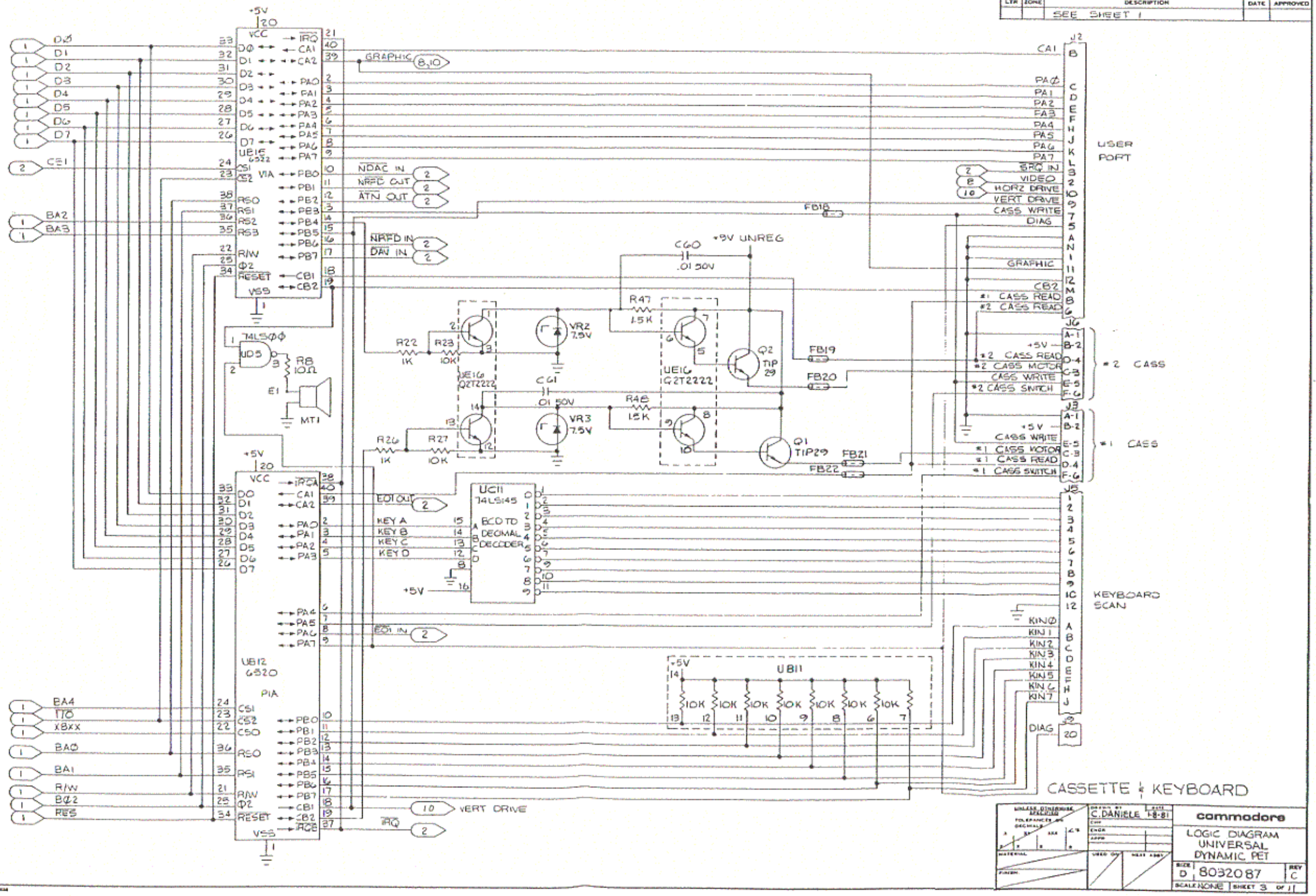

commodore

LOGIC DIAGRAM
UNIVERSAL
DYNAMIC PET

C. DANIELE 1-8-81

SIZE D | 8032087 | REV C

SCALE NONE | SHEET 3 OF 11

REVISIONS				
LTR	ZONE	DESCRIPTION	DATE	APPROVED
		SEE SHEET 1		

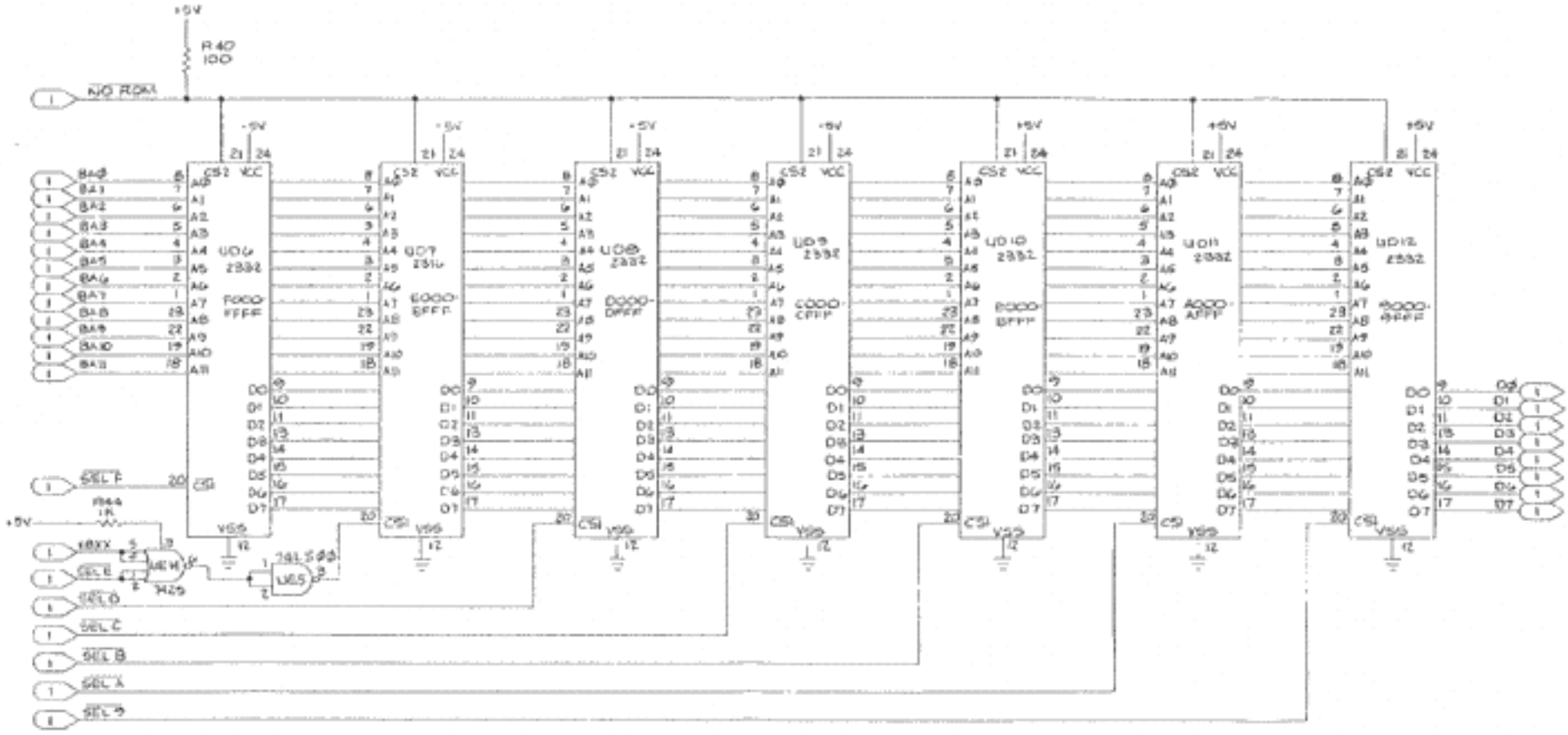

ROMS

C. DANIELE 7-8-8	commodore	
	LOGIC DIAGRAM UNIVERSAL DYNAMIC PET	
	SIZE D 8032087	REV C
	SCALE NONE SHEET 6 OF 9	

REVISIONS				
LTR	ZONE	DESCRIPTION	DATE	APPROVED
		SEE SHEET 1		

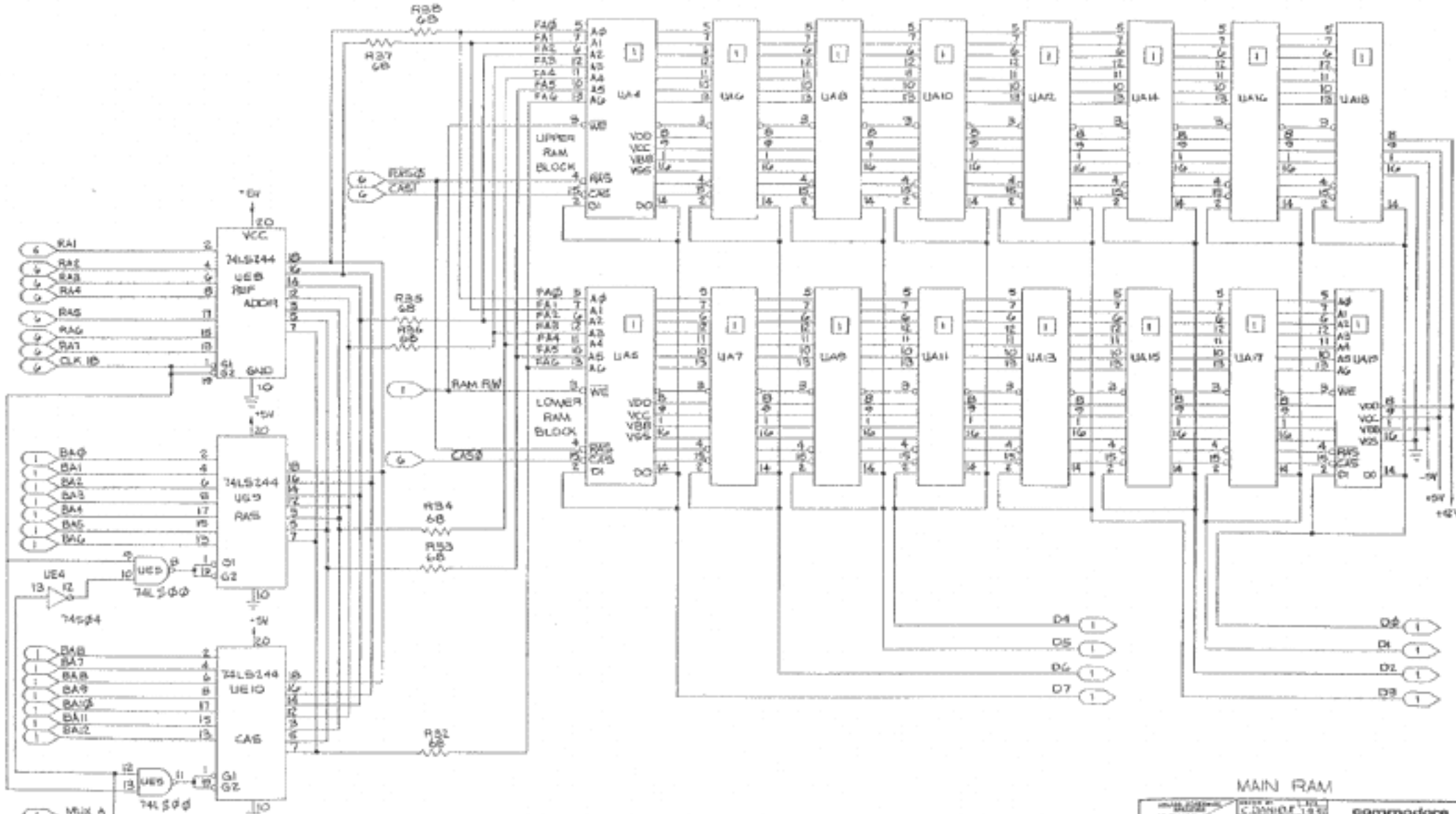

MAIN RAM

commodore

LOGIC DIAGRAM UNIVERSAL DYNAMIC PET

SIZE D 8037087 REV C

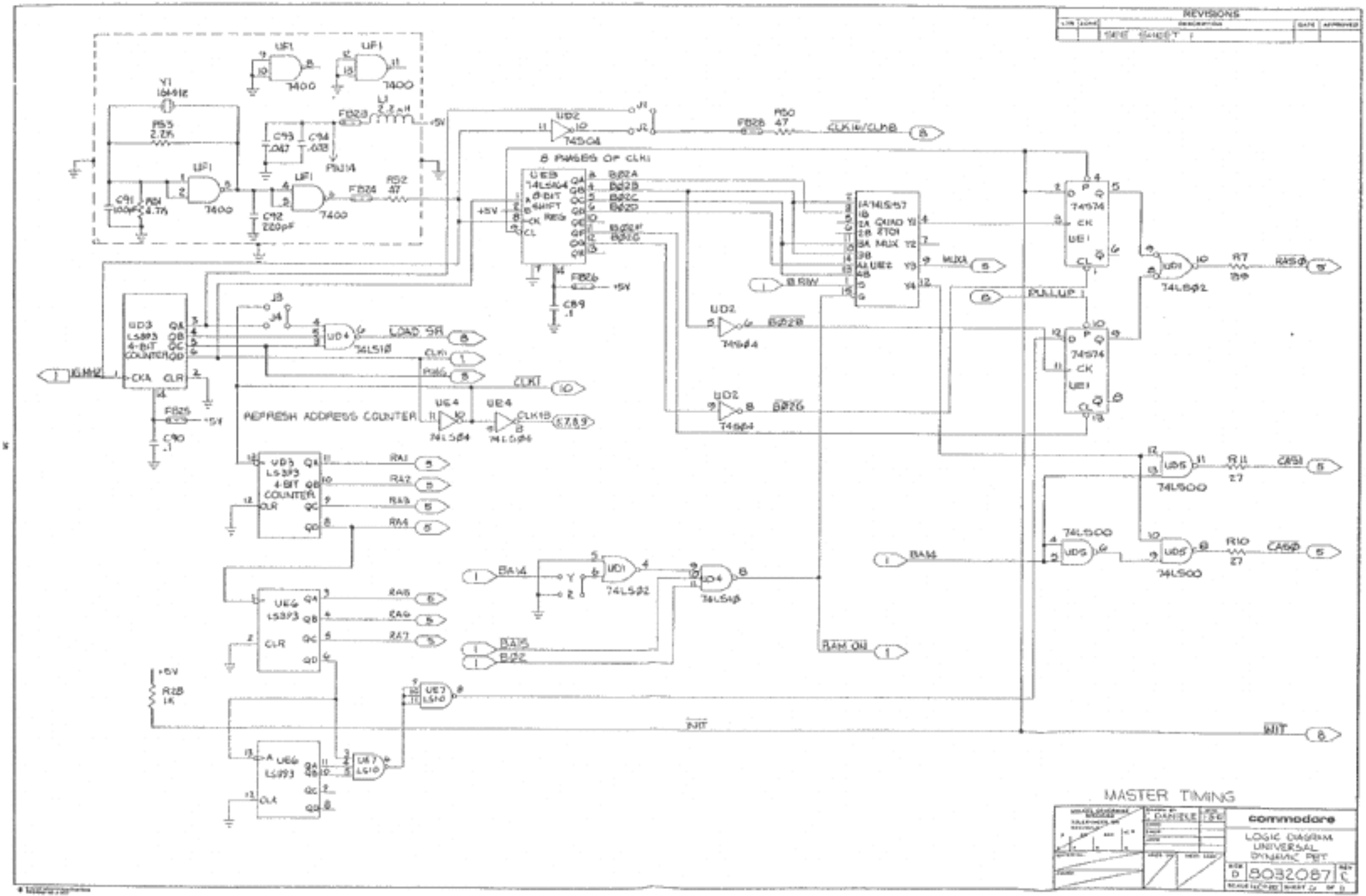
REVISIONS
MASTER TIMING
commodore
LOGIC DIAGRAM
UNIVERSAL
DYNAMIC PET
8032087
8 PHASES OF CLK1
REFRESH ADDRESS COUNTER
LOAD SR
CLK1
CLK2
CLK1B
CLK4/CLK8
MUX
PULLUP
RAS0
CAS1
CAS0
RAM ON
INIT
WIT
RA1
RA2
RA3
RA4
RA5
RA6
RA7
74LS93
74LS04
74LS157
74S74
74LS00
74LS02
74LS10
7400

REVISIONS				
LTR	ZONE	DESCRIPTION	DATE	APPROVED
		SEE SHEET 1		

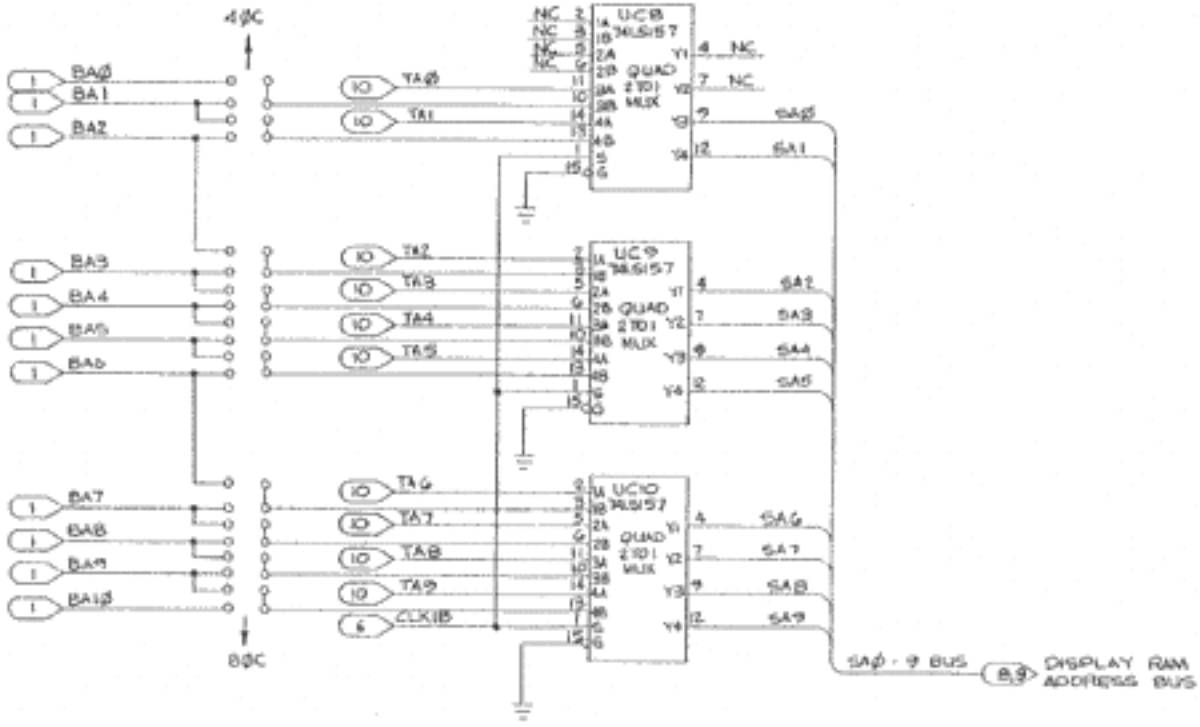

DISPLAY ADDRESS MUX

DRAWN BY C. DANIELS	1-28	commodore	
		LOGIC DIAGRAM UNIVERSAL DYNAMIC PET	
		SIZE D	8032087
		SCALE NONE	SHEET 1 OF 2

REVISIONS				
LTR	ZONE	DESCRIPTION	DATE	APPROVED
		SEE SHEET 1		

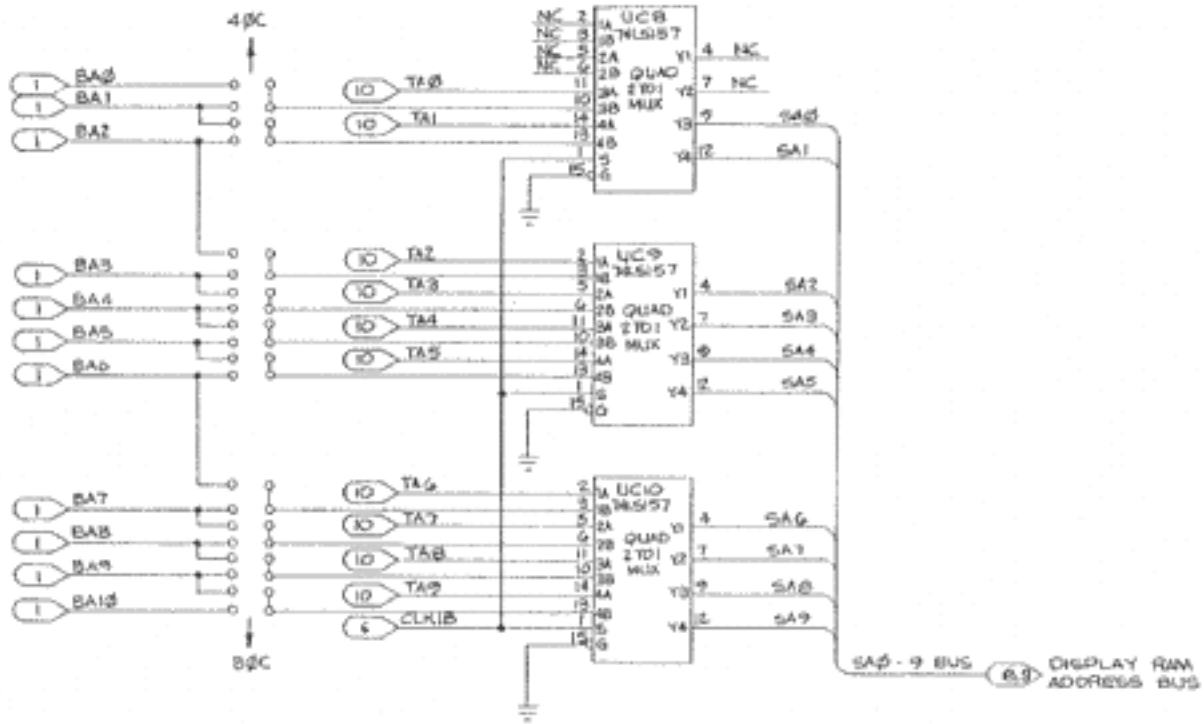

DISPLAY ADDRESS MUX

C. RAYMOND	FEB	commodore	
		LOGIC DIAGRAM, UNIVERSAL DYNAMIC PET	
		SIZE D	8032087	REV 2
		SCHEMATIC SHEET 2 OF 2	

REVISIONS				
LTR	ZONE	DESCRIPTION	DATE	APPROVED
		SEE SHEET 1		

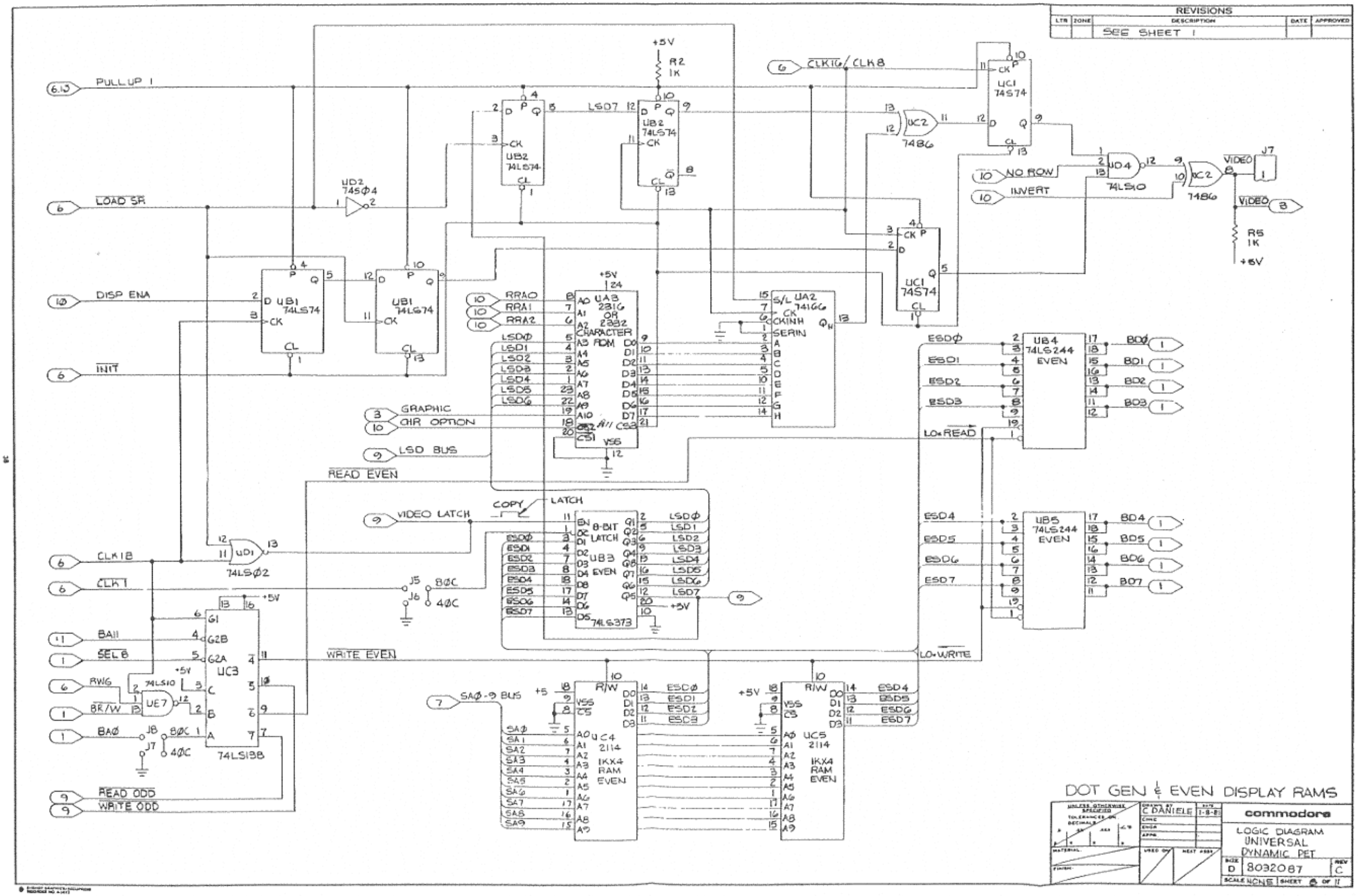

DOT GEN & EVEN DISPLAY RAMS

UNLESS OTHERWISE SPECIFIED TOLERANCES ON DECIMALS

DRAWN BY C DANIELE DATE 1-8-81

commodore

LOGIC DIAGRAM UNIVERSAL DYNAMIC PET

SIZE D 8032087 REV C

SCALE NONE SHEET 8 OF 11

REVISIONS				
LTR	ZONE	DESCRIPTION	DATE	APPROVED
		SEE SHEET 1		

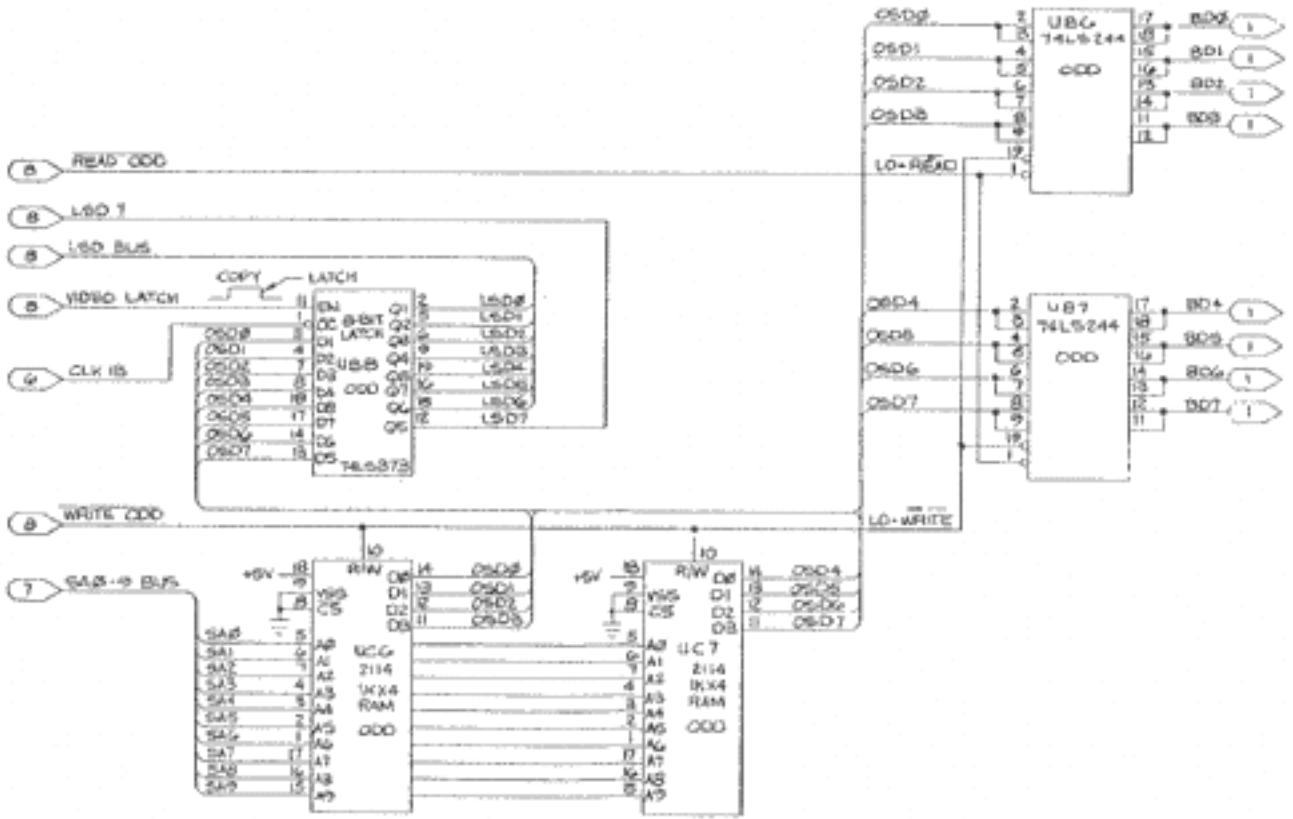

ODD DISPLAY RAMS

commodore

LOGIC DIAGRAM
UNIVERSAL
DYNAMIC PET

SIZE D | 8032081 | REV C

SCALE NONE | SHEET 9 OF 11

REVISIONS				
LTR	ZONE	DESCRIPTION	DATE	APPROVED
		SEE SHEET 1		

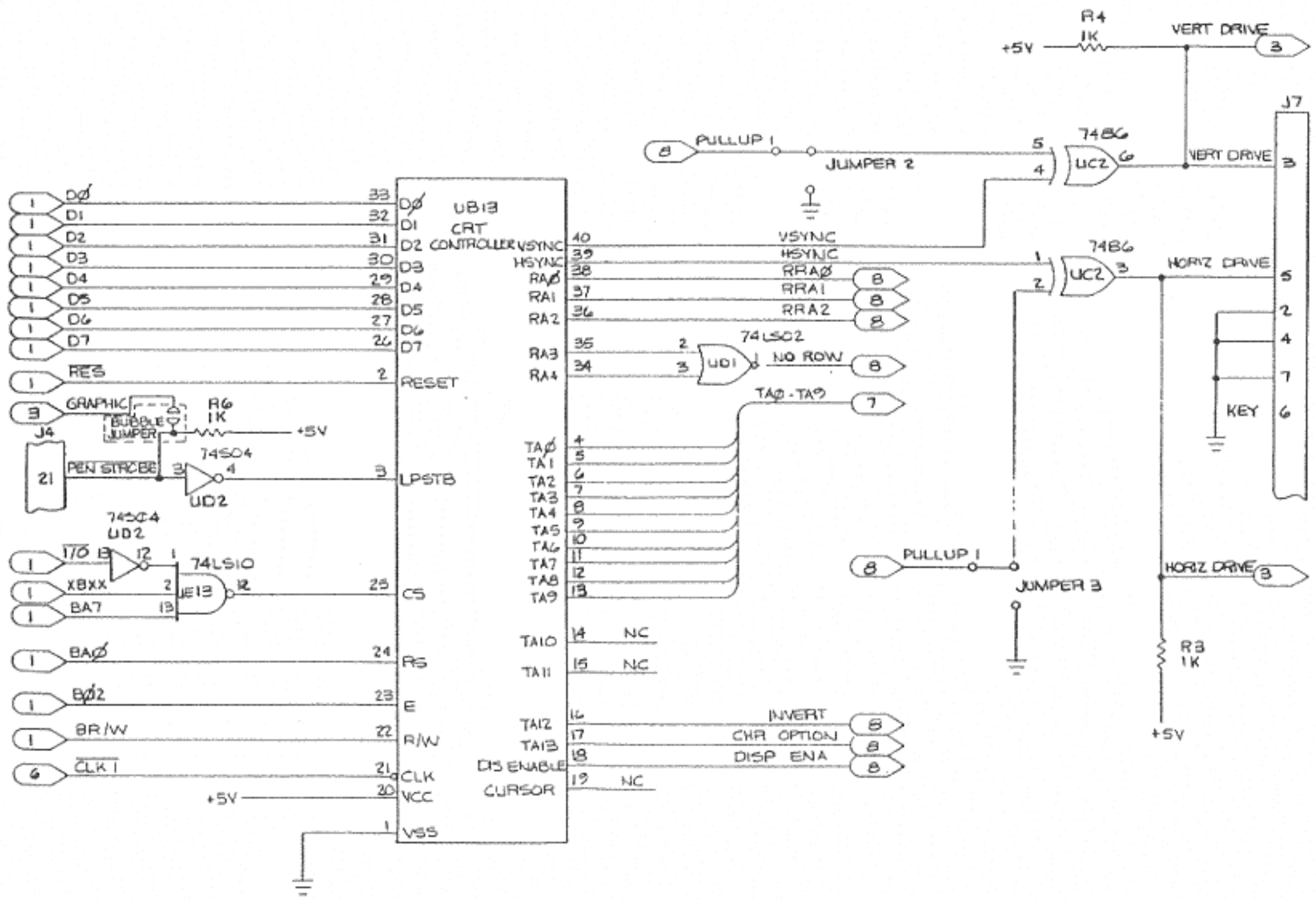

CRTC AND SYNC BUFFERS

UNLESS OTHERWISE SPECIFIED TOLERANCES ON DECIMALS	DRAWN BY: C. DANIELE	DATE 1-8-81	commodore
	CHKD		LOGIC DIAGRAM UNIVERSAL DYNAMIC PET
	ENGR		
	APPR		
MATERIAL	USED ON	NEXT ASSY	SIZE D 8032087 REV C
FINISH			SCALE NONE SHEET 10 OF 11

REVISIONS				
LTR	ZONE	DESCRIPTION	DATE	APPROVED
		SEE SHEET 1		

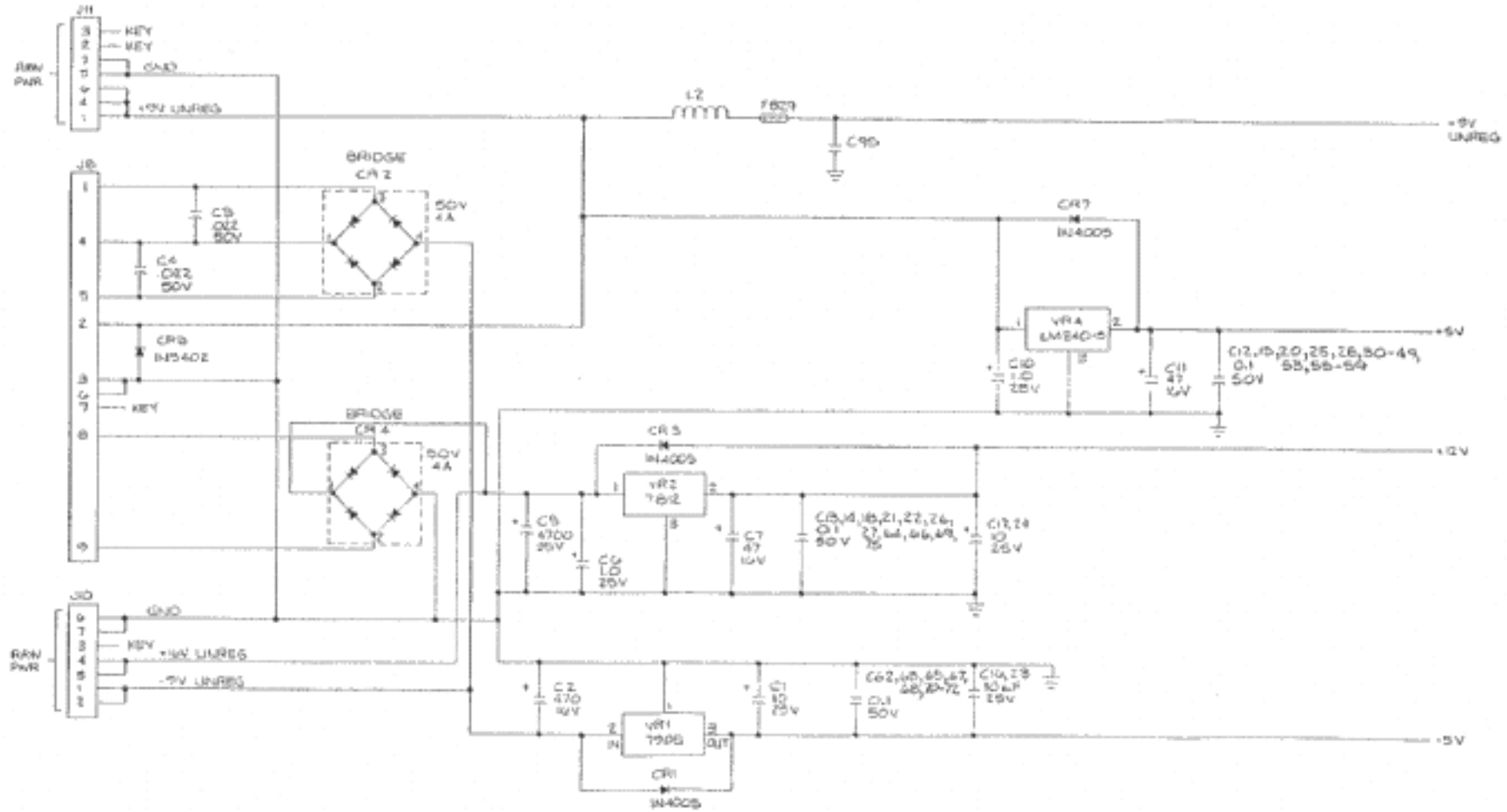

VOLTAGE REGULATOR

commodore

LOGIC DIAGRAM
UNIVERSAL
DYNAMIC PET

SIZE D | 8032087 | REV C

SCALE NONE | SHEET 11 OF 11

REVISIONS

LTR	ZONE	DESCRIPTION	DATE	APPROVED
		SEE SHEET 1		

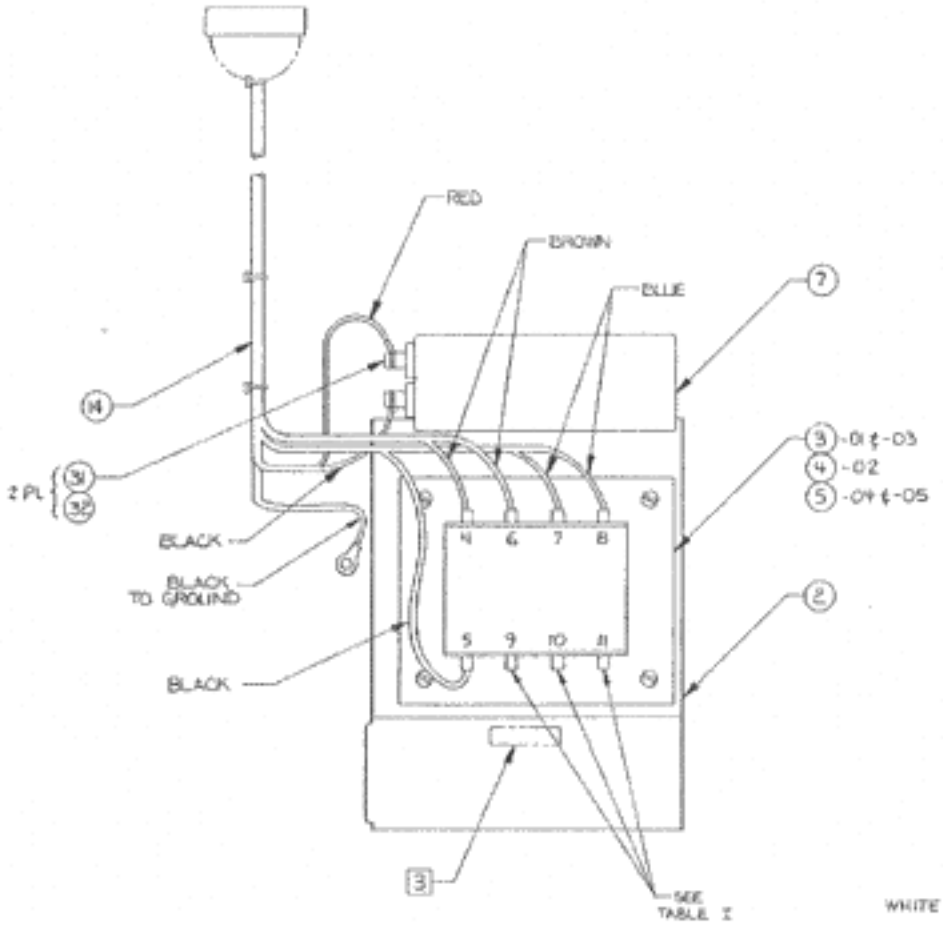

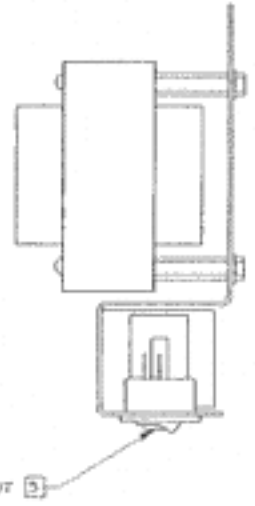

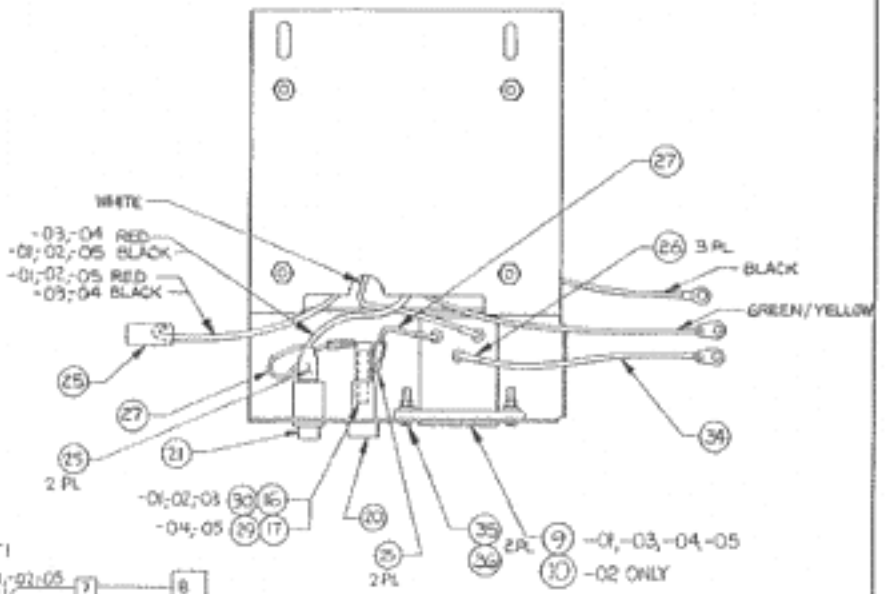

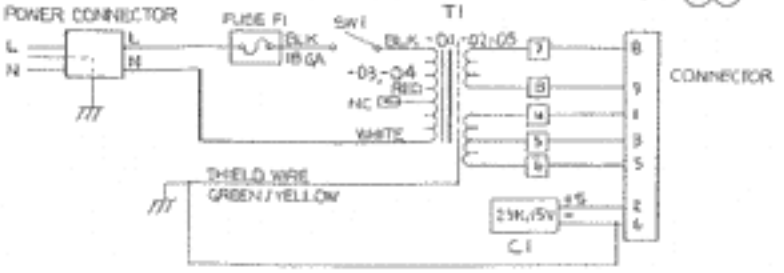

WIRING DIAGRAM

TABLE I

TERMINAL	VOLTAGE	USAGE
9 & 10	18	9" VIDEO
9 & 11	21	12" VIDEO

-01 THRU -05 SHOWN

commodore

POWER SUPPLY ASSY. 8032

PET 8032 8016

8032001 8016001

SIZE B 8032051 REV F

SCALE NONE SHEET 3 OF 3

BASIC CIRCUIT DIAGRAM (CDU-B80-CMD12)

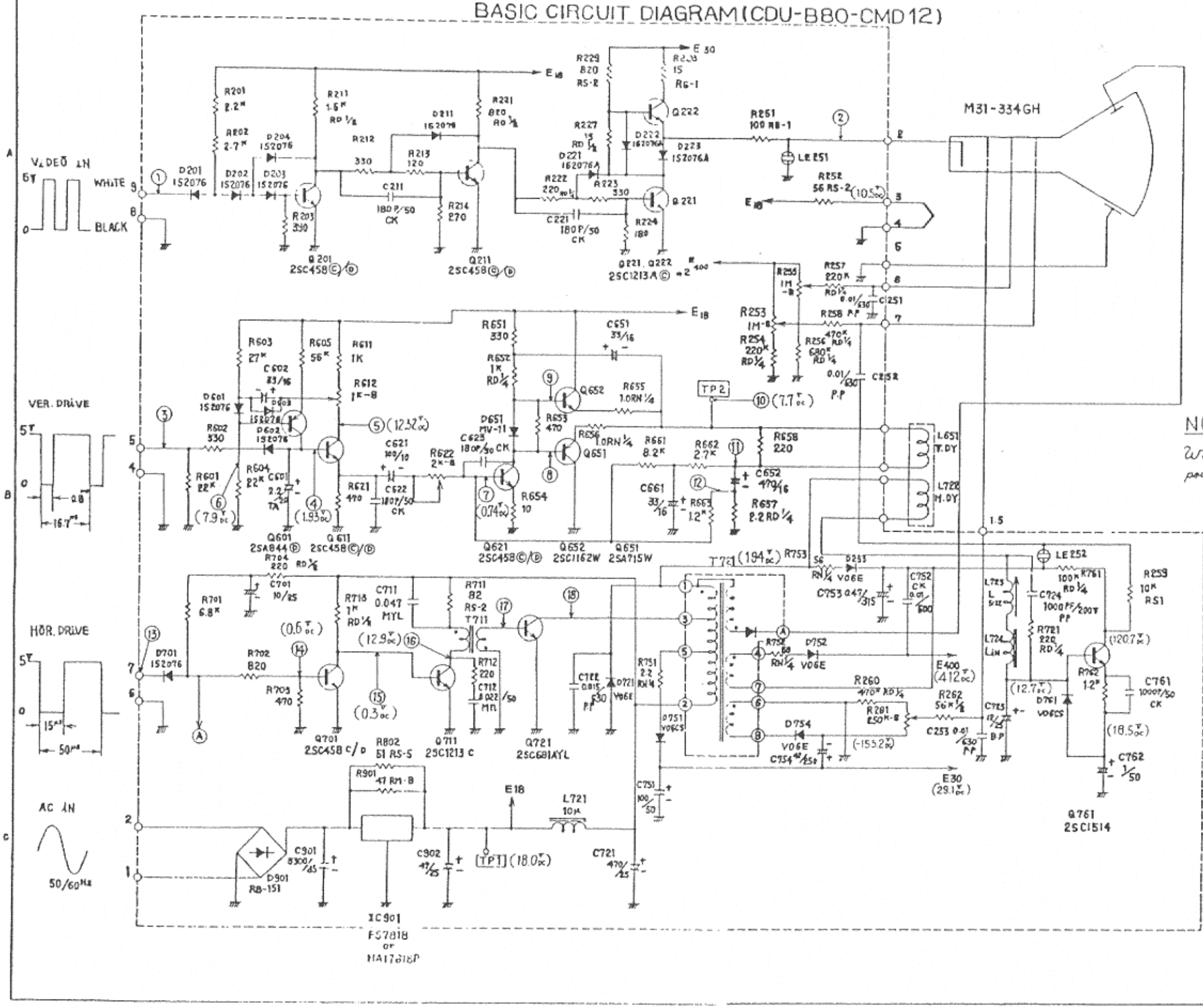

NOTES

Waveforms are measured at the points indicated with (N)

commodore

PCB SCHEMATIC
12" CRT DISPLAY

SIZE B | 321448 | REV

SCALE NONE | SHEET 1 OF 1

321450

REVISIONS				
LTR	ZONE	DESCRIPTION	DATE	APPROVED
A		PRODUCTION RELEASE	12/29/80	

THE INFORMATION AND DATA CONTAINED HEREIN IS PROPRIETARY AND SHALL NOT BE USED OR DUPLICATED WITHOUT PERMISSION OF COMMODORE BUSINESS MACHINES, INC.

DRAWN BY:	DATE 12-5-80	commodore
CHKD:	12/9/80	TITLE: PCB WAVEFORMS 12" CRT DISPLAY
ENGR:	12/29/80	
PROD:		
APPD:		SIZE A / DWG NO. 321450 / REV A
[illegible]:		RELEASE DATE / SHEET 1 OF 10

VIDEO (1/1)

1

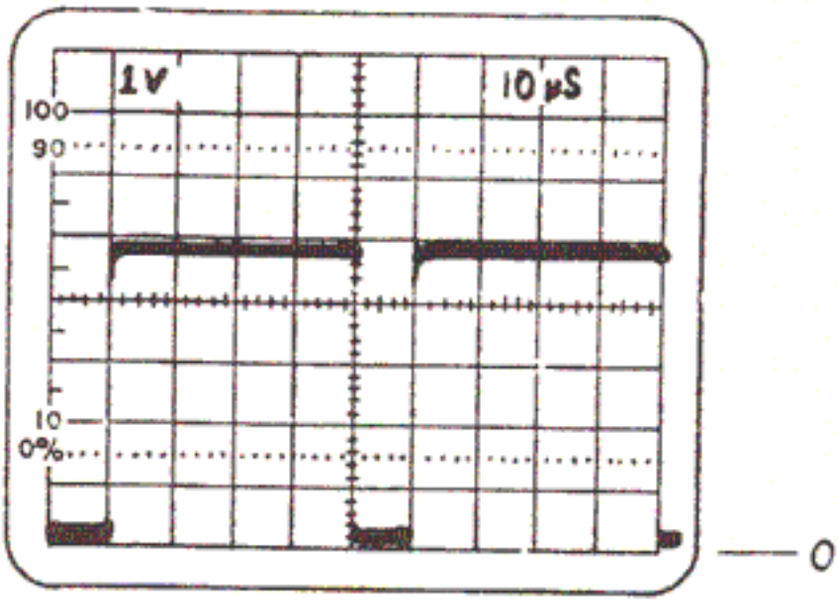

2

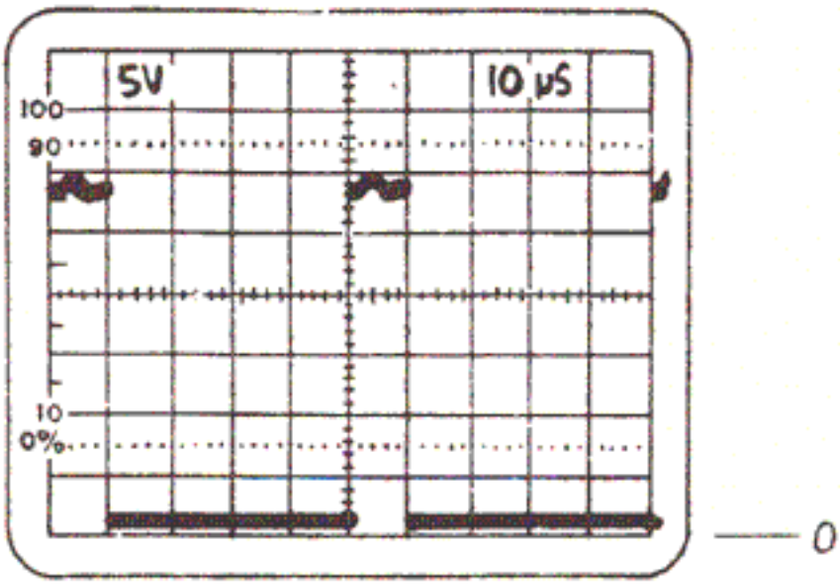

commodore

PCB WAVEFORMS
12" CRT DISPLAY

SIZE		REV
A	321450	A
SCALE NONE	SHEET 2 OF 10	

VERTICAL (1/3)

3

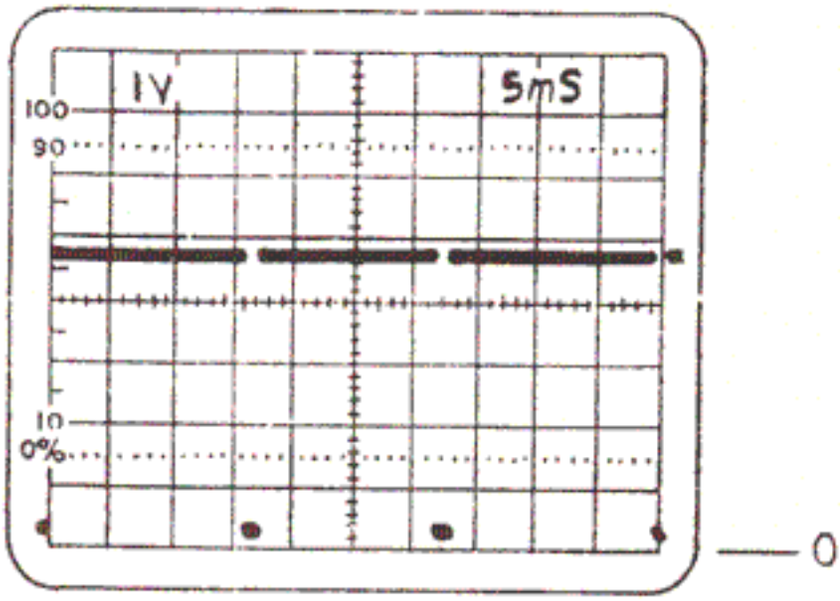

4

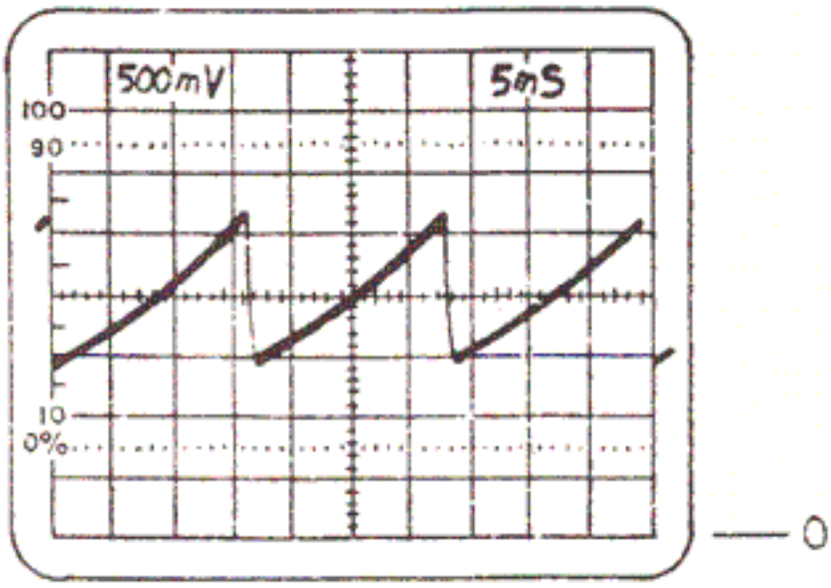

commodore

PCB WAVEFORMS
12" CRT DISPLAY

SIZE		REV
A	321450	A

SCALE NONE | SHEET 3 OF 10

VERTICAL (1/3)

5

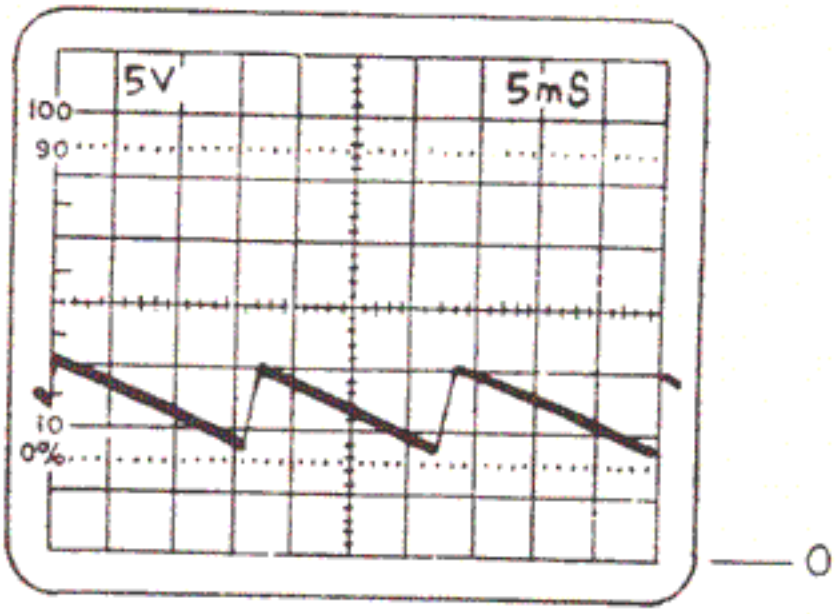

6

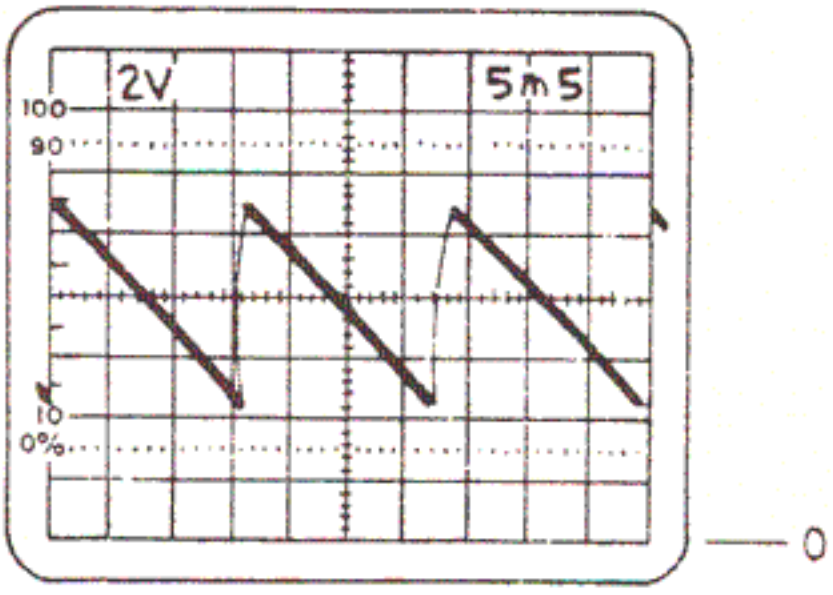

commodore

PCB WAVEFORMS
12" CRT DISPLAY

SIZE		REV
A	321450	A
SCALE NONE	SHEET 4 OF 10	

VERTICAL (2/3)

7

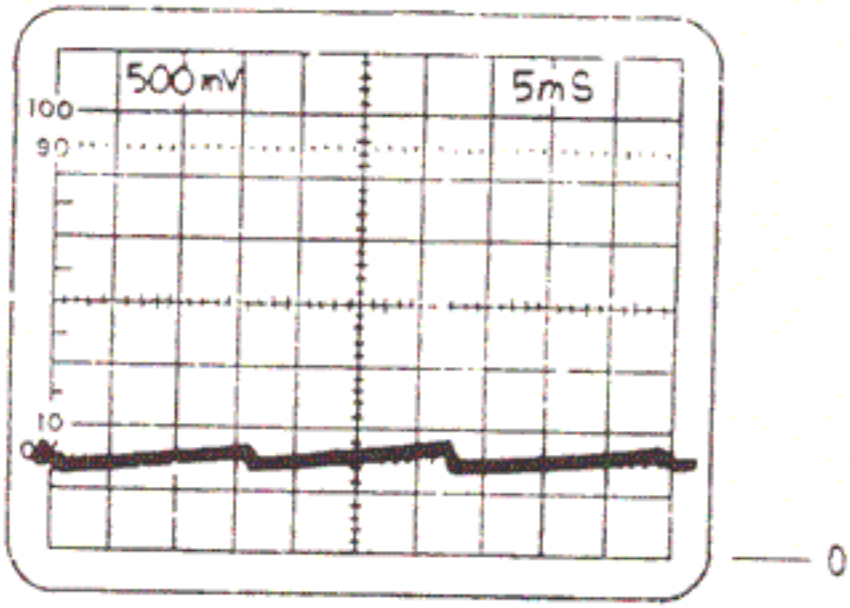

0

8

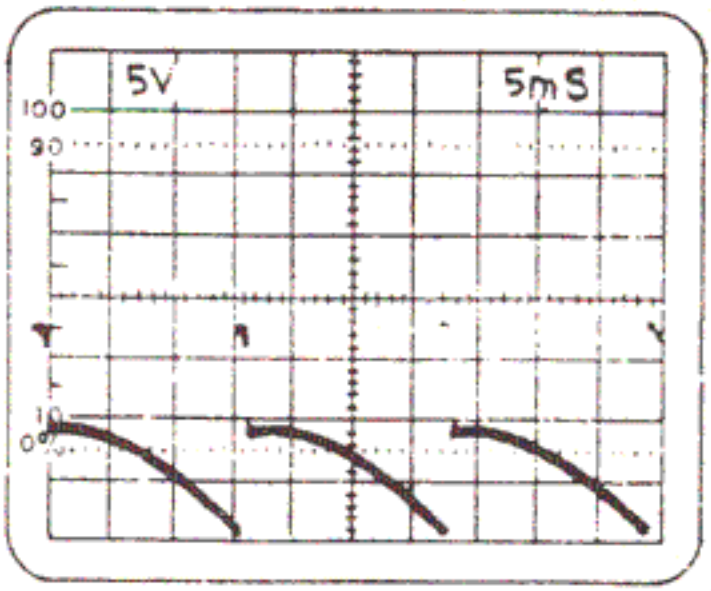

0

commodore

PCB WAVEFORMS
12" CRT DISPLAY

SIZE		REV
A	32:450	A
SCALE NONE	SHEET 5 OF 10	

VERTICAL (2/3)

(9)

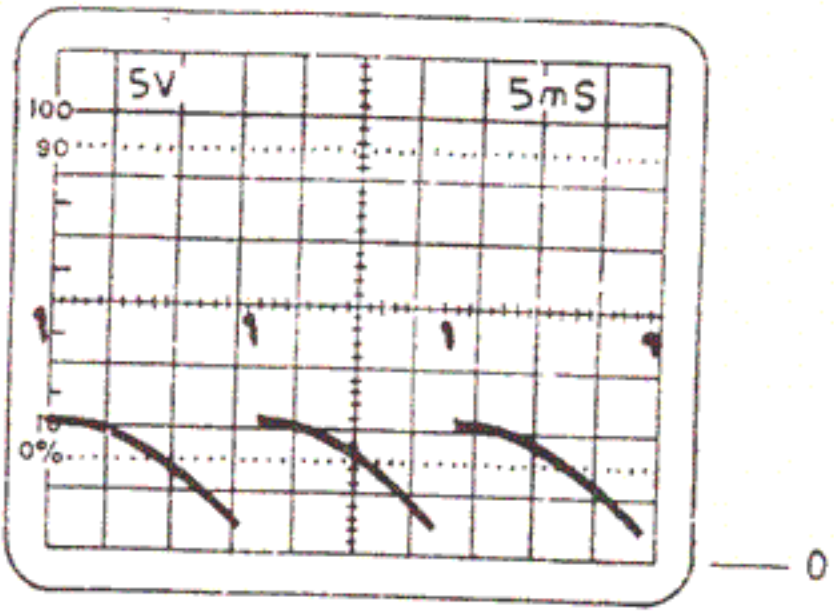

(10)

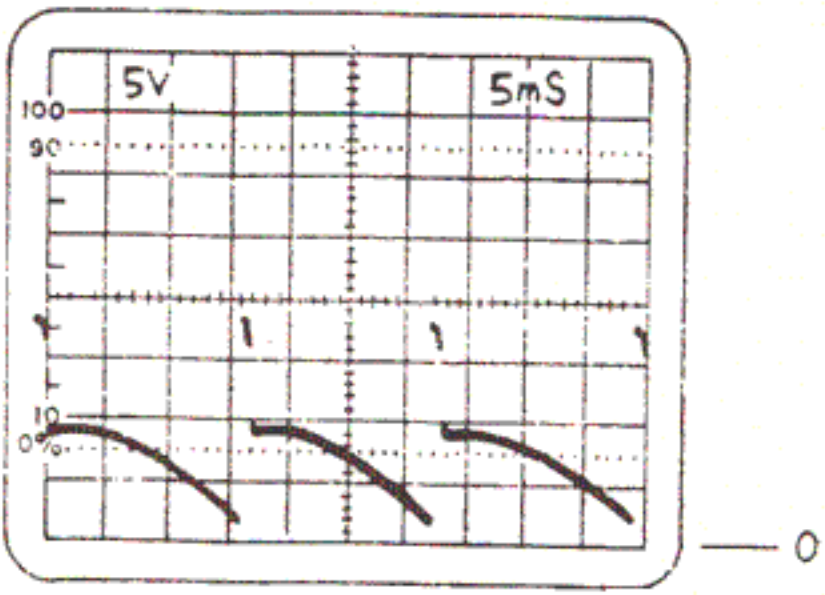

commodore		
PCB WAVEFORMS 12" CRT DISPLAY		
SIZE A	321450	REV A
SCALE NONE	SHEET 6 OF 10	

VERTICAL (3/3)

(11)

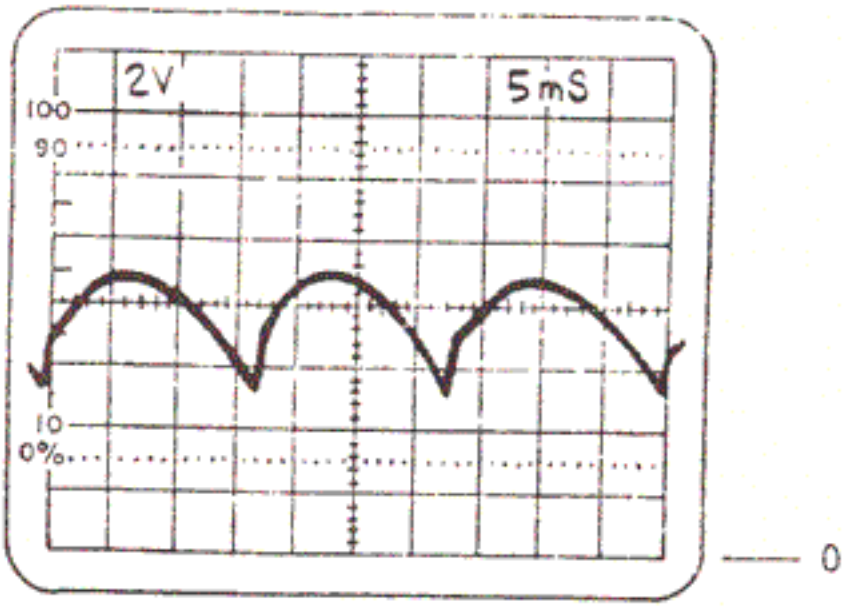

(12)

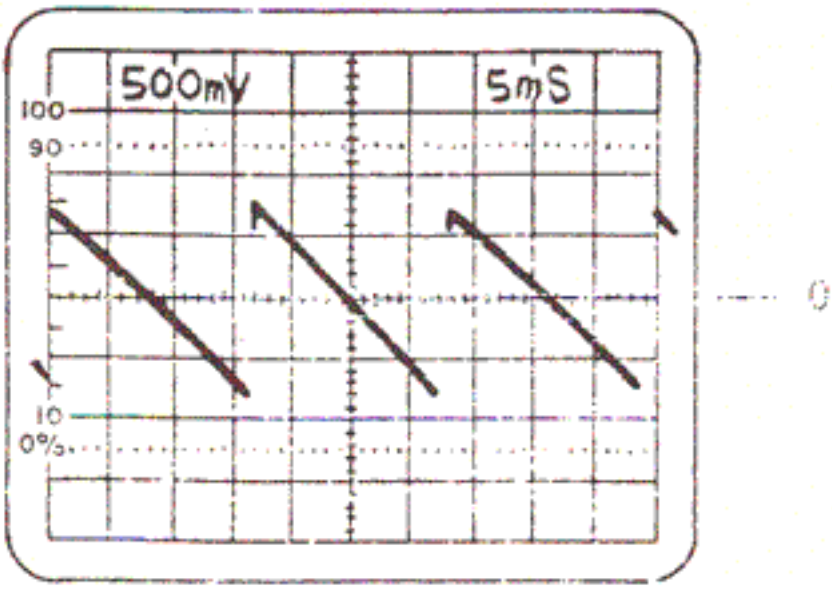

commodore		
PCB WAVEFORMS 12" CRT DISPLAY		
SIZE A	321450	REV A
SCALE NONE	SHEET 7 OF 10	

HORIZONTAL (1/2)

(3)

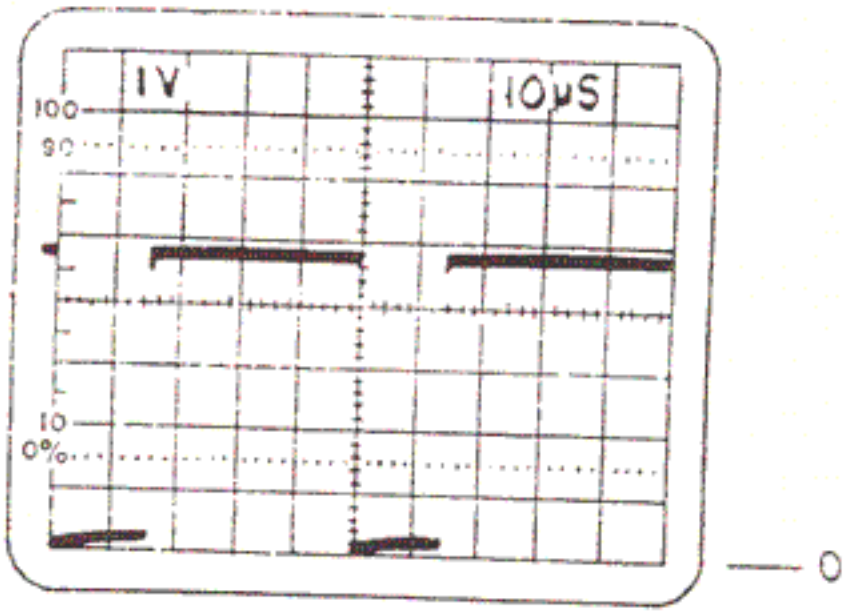

(14)

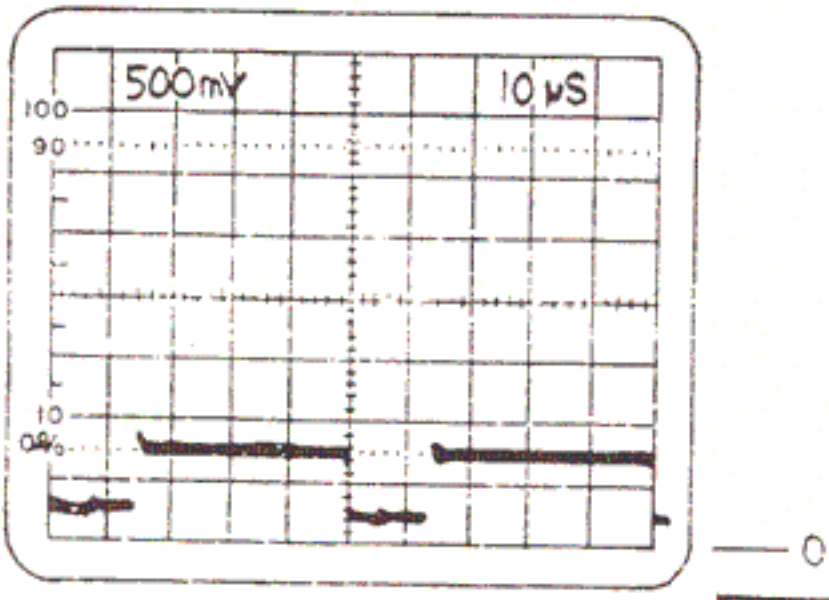

commodore

PCB WAVEFORMS
12" CRT DISPLAY

SIZE		REV
A	321450	A

SCALE NONE | SHEET 8 OF 10

HORIZONTAL (1/2)

(15)

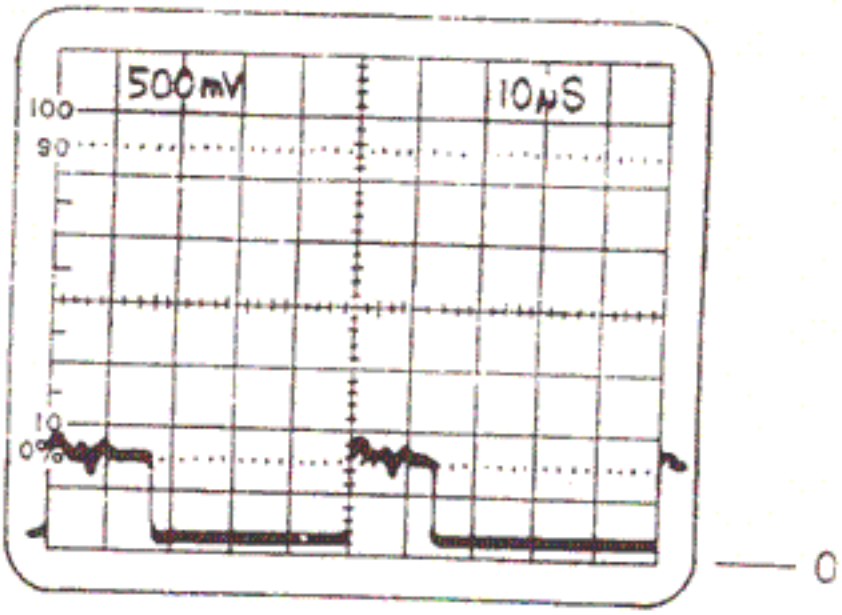

(16)

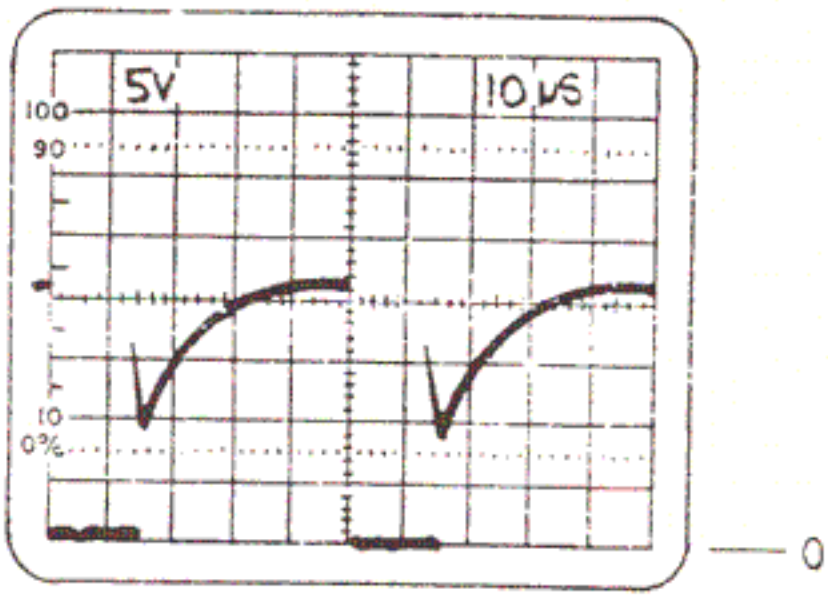

commodore

PCB WAVEFORMS
12" CRT DISPLAY

SIZE		REV
A	321450	A
SCALE NONE	SHEET 9 OF 10	

HORIZONTAL (2/2)

(17)

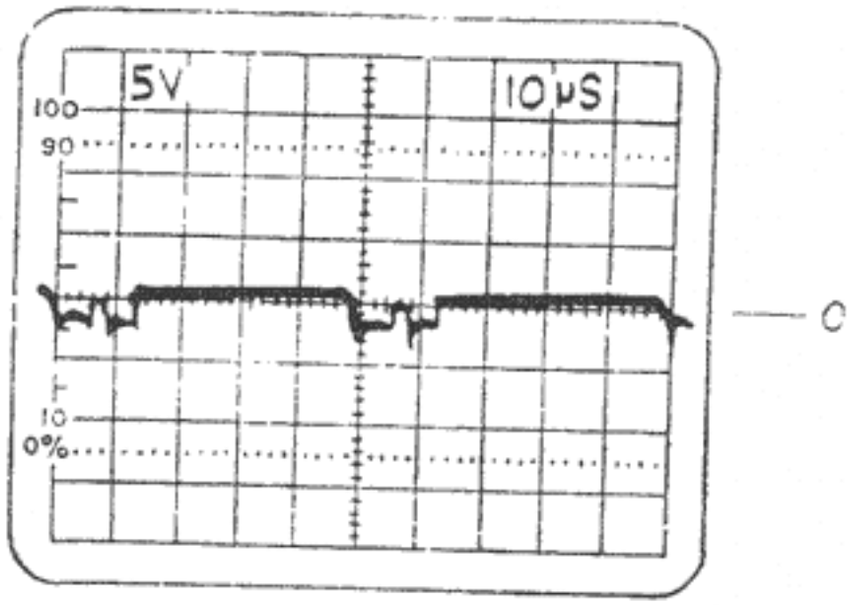

(18)

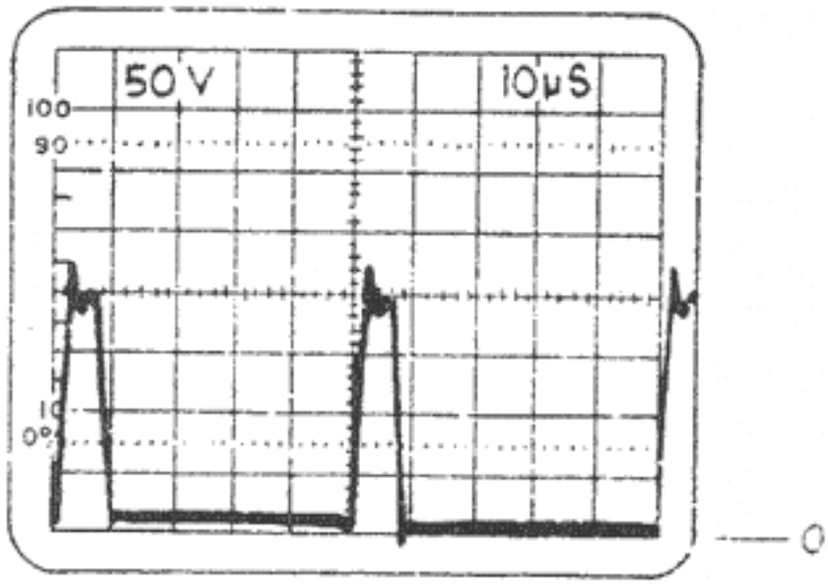

commodore		
PCB WAVEFORMS 12" CRT DISPLAY		
SIZE A	321450	REV A
SCALE NONE	SHEET 10 OF 10	

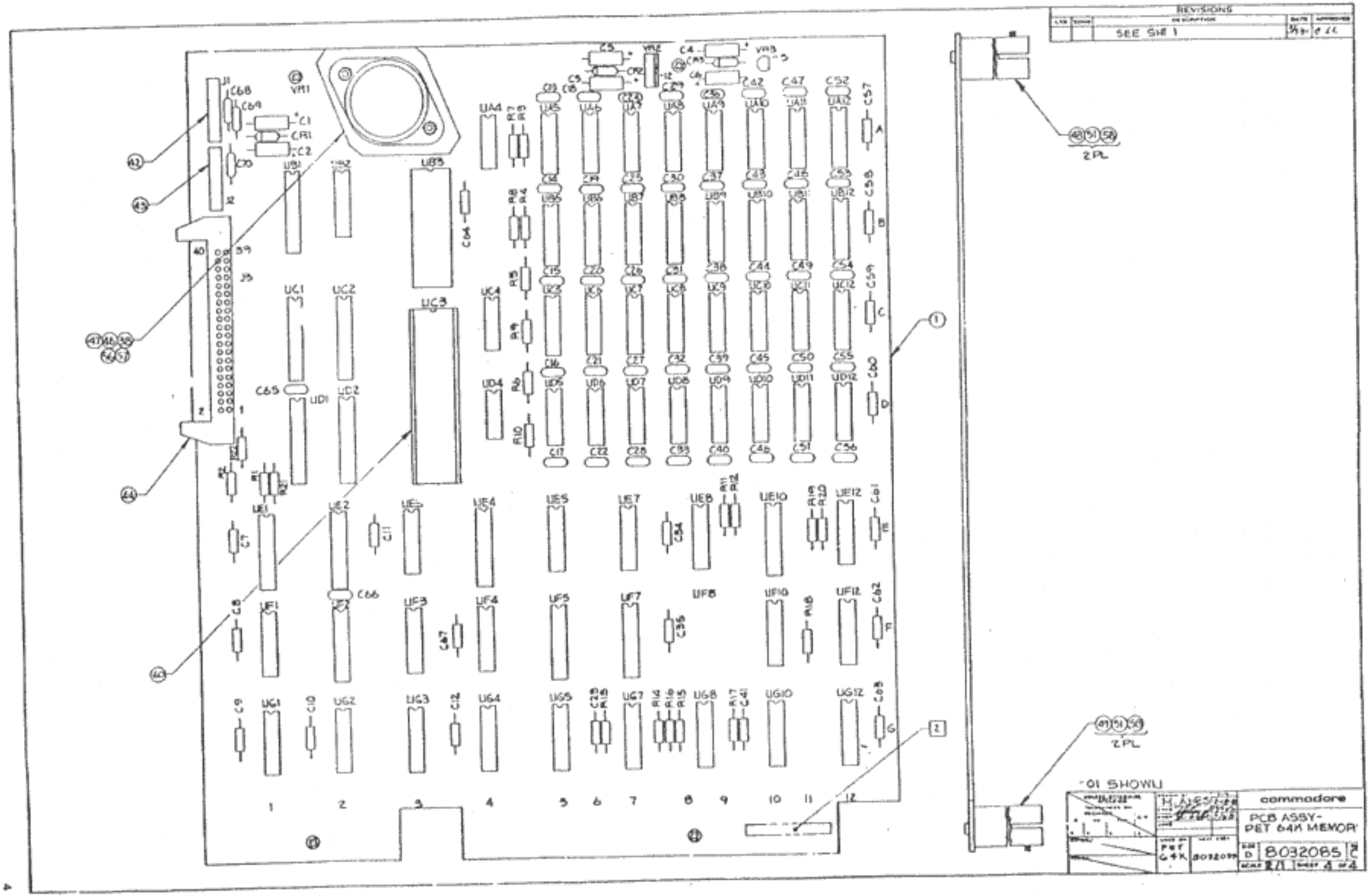
REVISIONS
SEE SHT 1
2PL
2PL
-01 SHOWN
commodore
PCB ASSY-
PET 64K MEMORY
8032085
SHEET 4 OF 4

REVISIONS			
LTR	ZONE	DESCRIPTION	DATE
A		PRODUCTION RELEASE	85/11
B		REV PER ECO 2064	86
C		REV PER ECO 2095	86
D		REV PER ECO 2137	1986

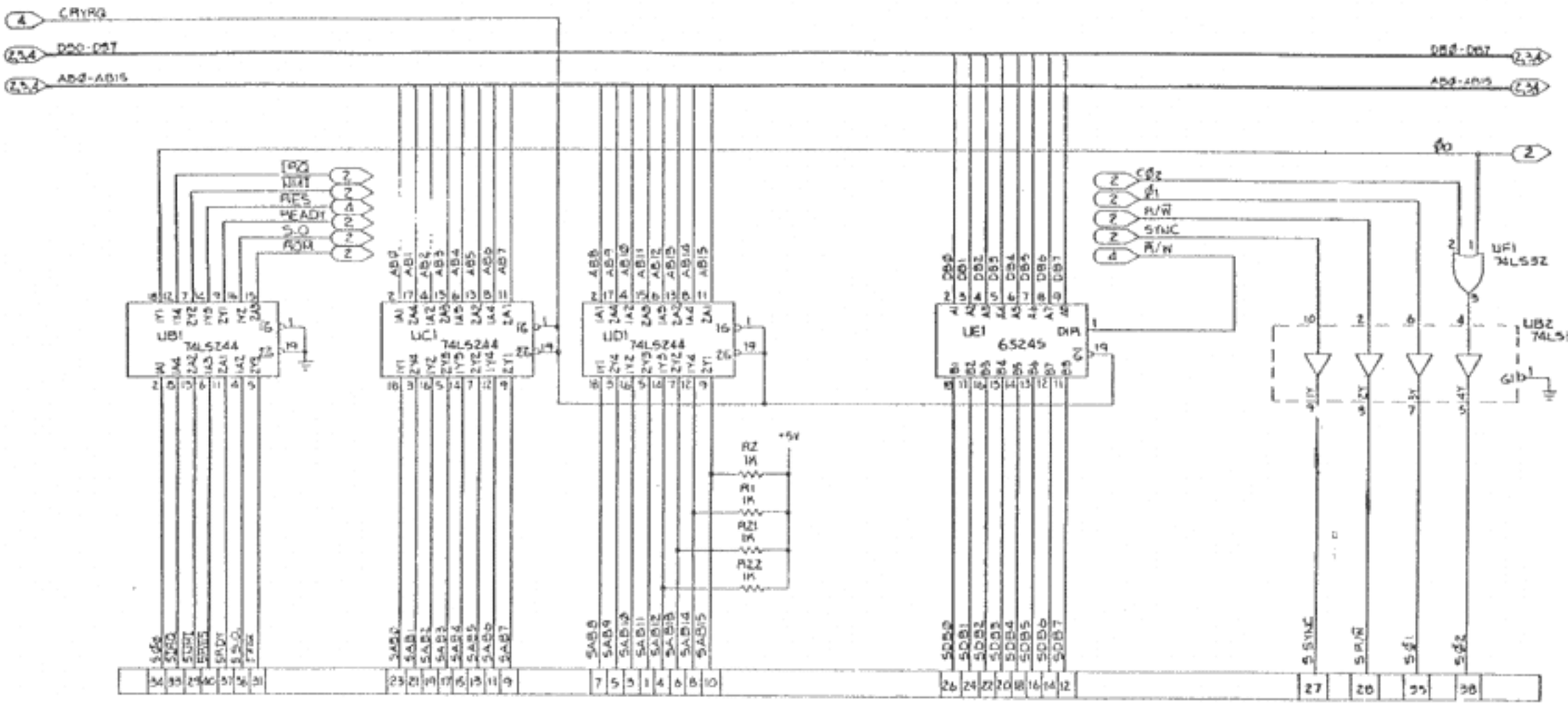

-01 SHOWN

3. DO NOT MOUNT FLUSH TO THE BOARD. MOUNT STANDOFFS UP.
2. CAPACITANCE VALUES ARE IN MICROFARADS, 50V.
1. RESISTANCE VALUES ARE IN OHMS, 1/4W ±5%.
NOTES-UNLESS OTHERWISE SPECIFIED:

			commodore
			LOGIC DIAGRAM
			PET 64K MEMO
	PET 64K	8032085	SIZE D 8032084
			SCALE NONE SHEET

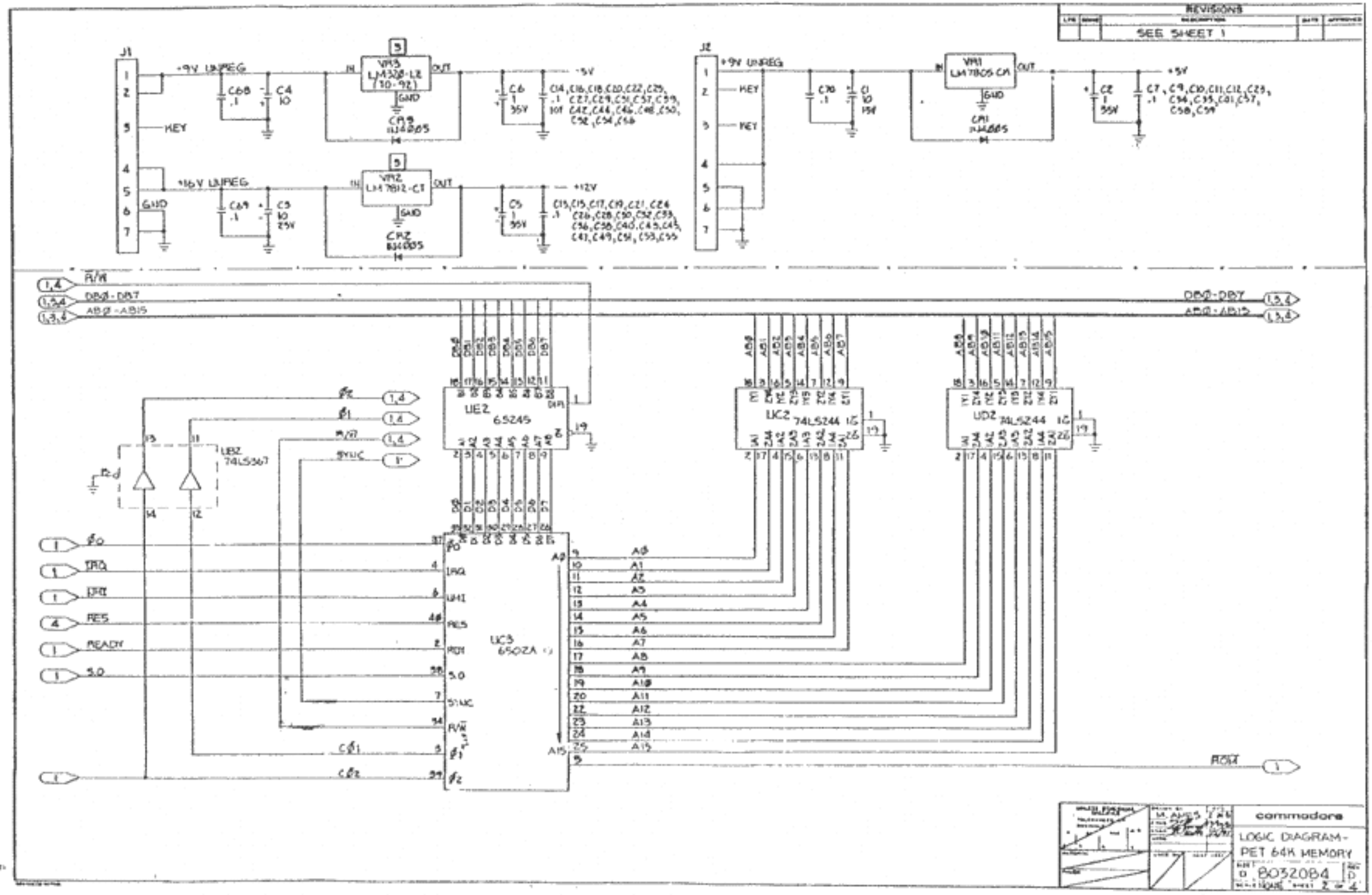
REVISIONS
SEE SHEET 1
J1
J2
+9V UNREG
KEY
+16V UNREG
GND
VR3 LM320-L2 (10-92)
VR2 LM7812-CT
VR1 LM7805-CA
+5V
+12V
UE2 6545
UC2 74LS244
UD2 74LS244
UB2 74LS367
UC3 6502A
R/W
DB0-DB7
AB0-AB15
RDY
IRQ
RES
SYNC
commodore
LOGIC DIAGRAM-
PET 64K MEMORY
8032084

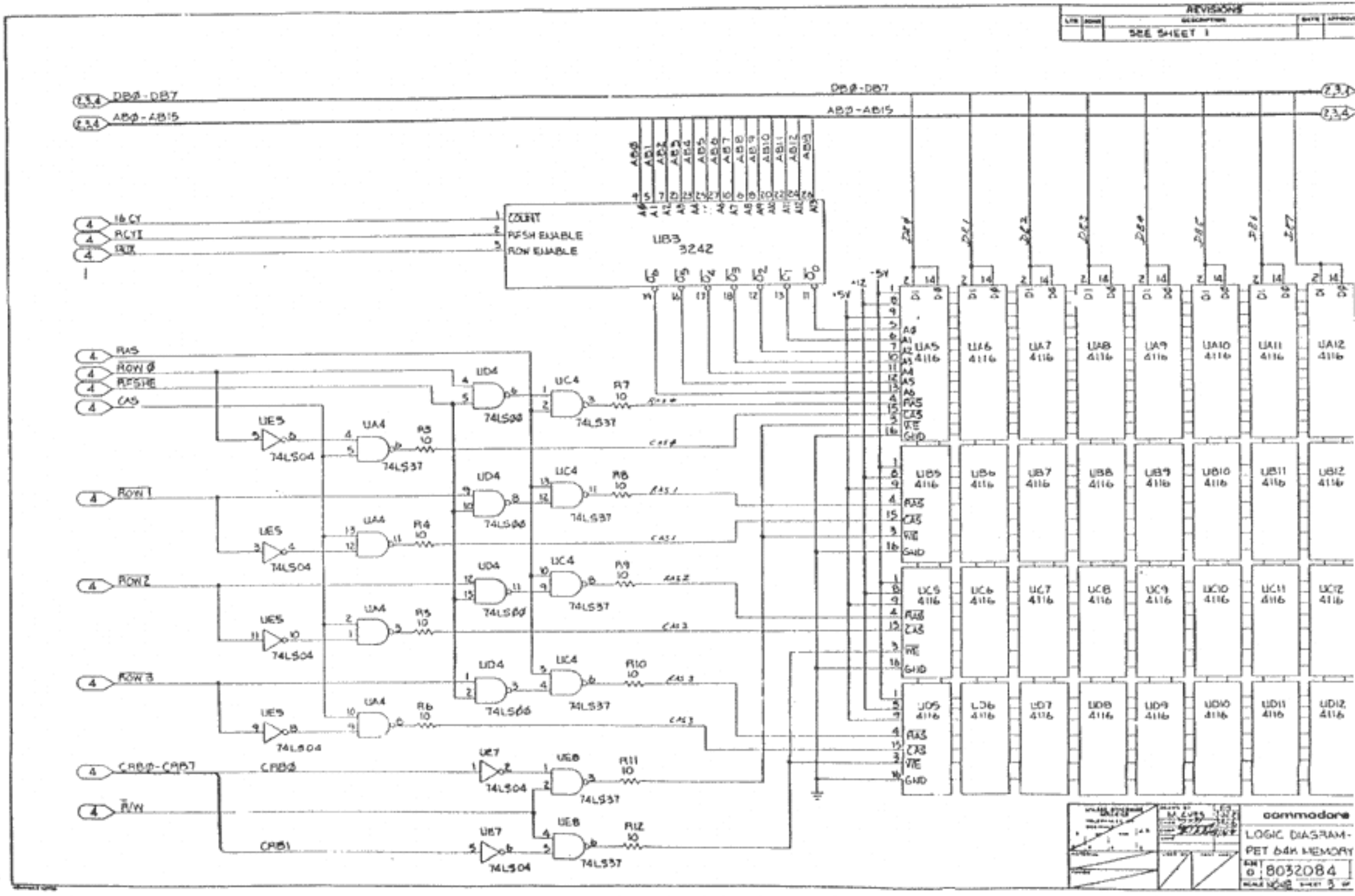
REVISIONS
SEE SHEET 1
DB0-DB7
AB0-AB15
16CY
RCYI
RUN
UB3
3242
COUNT
REFSH ENABLE
ROW ENABLE
RAS
ROW0
REFSHE
CAS
ROW1
ROW2
ROW3
CRB0-CRB7
R/W
CRB0
CRB1
UD4
74LS00
UC4
74LS37
UE5
74LS04
UA4
UE7
UE8
R7 10
R8 10
R9 10
R10 10
R11 10
R12 10
UA5 4116
UA6 4116
UA7 4116
UA8 4116
UA9 4116
UA10 4116
UA11 4116
UA12 4116
UB9 4116
UC5 4116
UD5 4116
commodore
LOGIC DIAGRAM-
PET 64K MEMORY
8032084

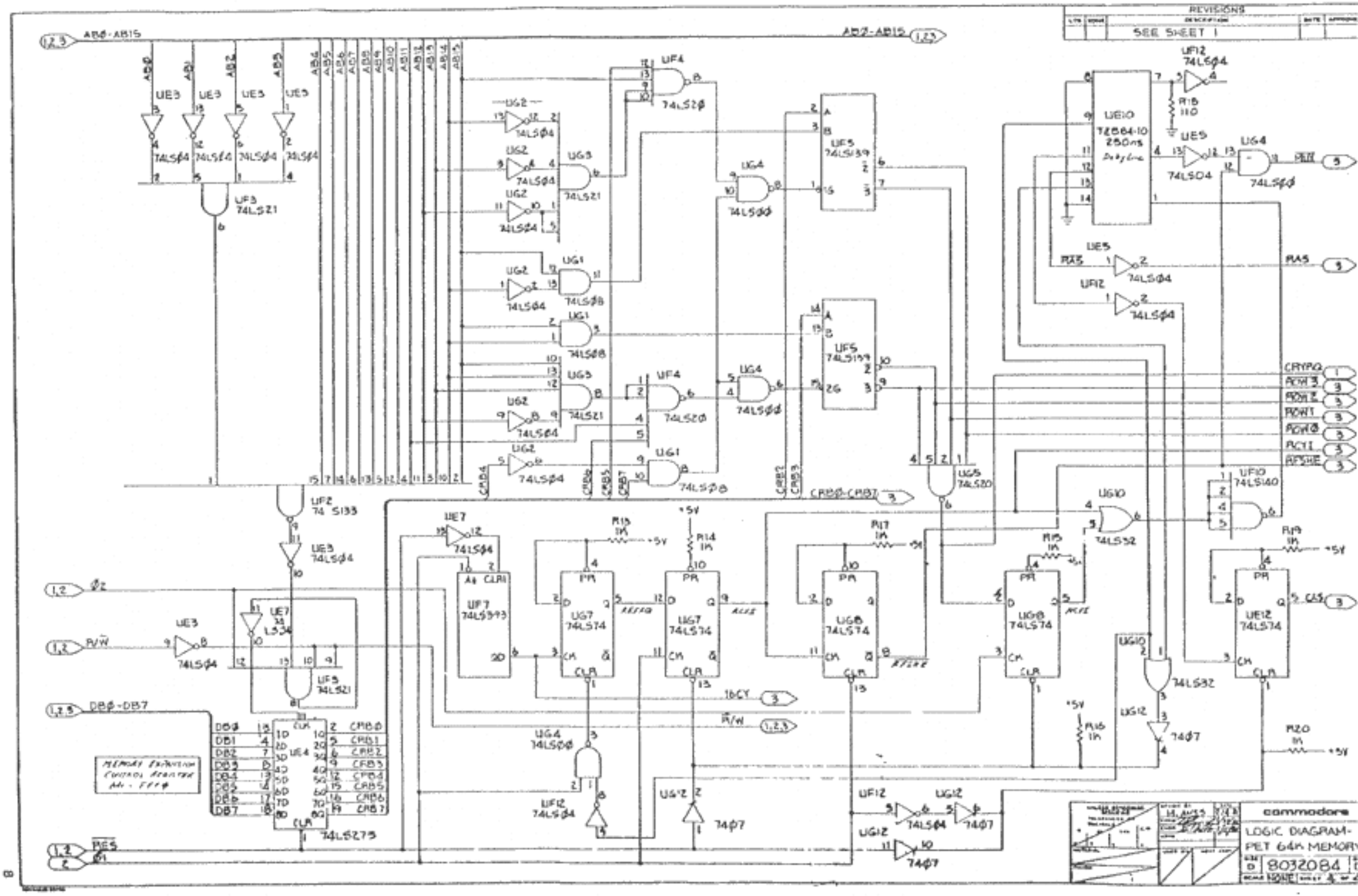
REVISIONS
SEE SHEET 1
AB0-AB15
AB2-AB15
UE3
74LS04
UF3
74LS21
UF4
74LS20
UG2
UG3
UG1
74LS08
UG4
74LS00
UE5
74LS139
UF5
UE10
TZ84-10
250ns
Delay Line
UF12
UG4
74LS00
UE5
74LS04
PAS
CRYPQ
RCW3
RCW2
RCW1
RCW0
RCT1
RFSHE
CRB0-CRB7
UG5
74LS20
UF10
74LS140
UG10
74LS32
UF2
74 S133
UE7
74LS04
UF7
74LS393
UG7
74LS74
UG8
74LS74
UE12
74LS74
CAS
R13
1K
R14
1K
R17
1K
R18
1K
R19
1K
R20
1K
R16
1K
+5V
UE7
74 LS34
UF5
74LS21
DB0-DB7
UE4
74LS273
CRB0
CRB1
CRB2
CRB3
CRB4
CRB5
CRB6
CRB7
MEMORY EXPANSION
CONTROL REGISTER
AD - FFF0
16CY
R/W
UG12
74 07
UF12
74LS04
UG12
74 07
PES
commodore
LOGIC DIAGRAM-
PET 64K MEMORY
8032084

REVISIONS				
LTR	ZONE	DESCRIPTION	DATE	APPROVED
		SEE SHT 1		

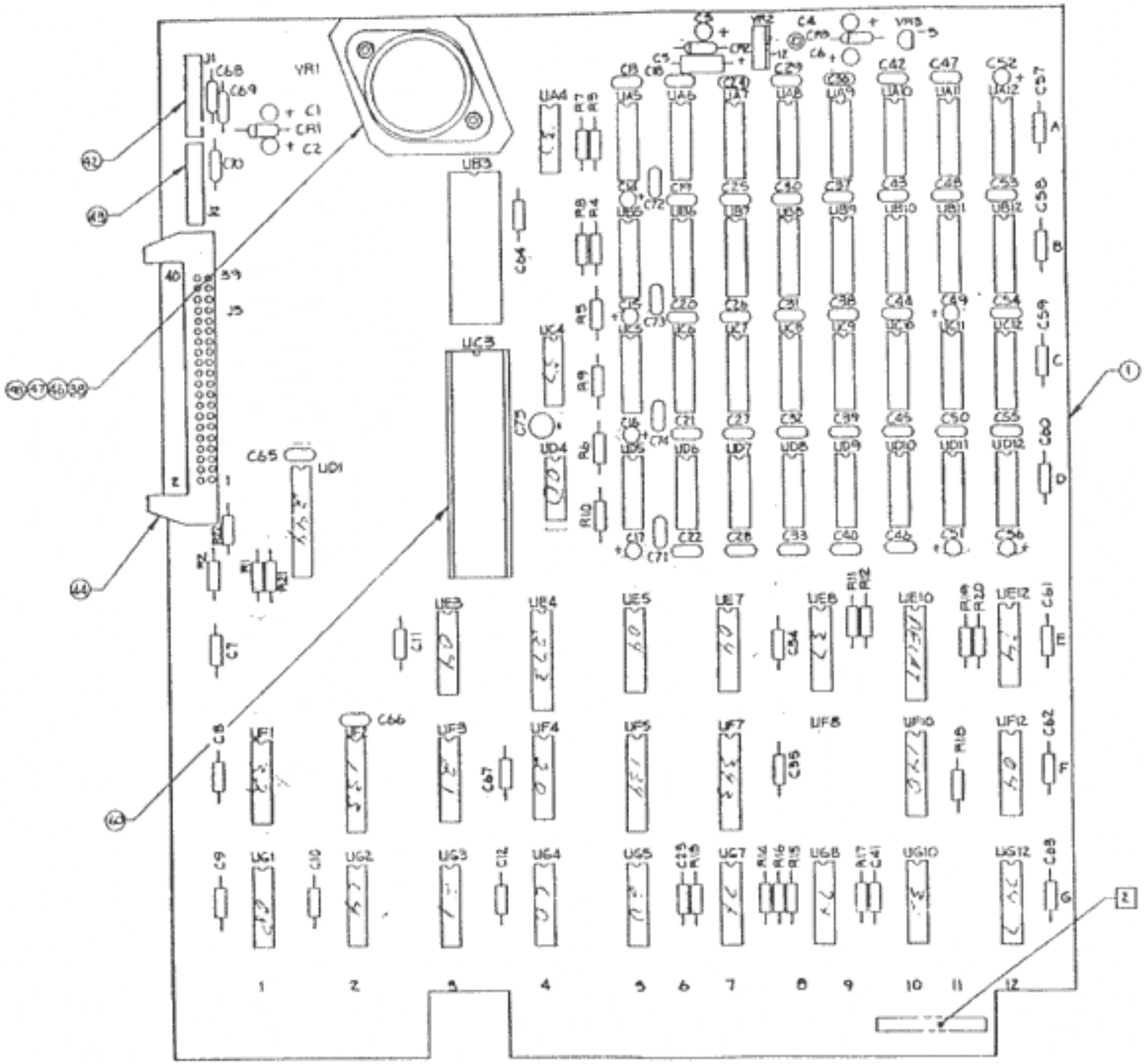

CHANGE SILKSCREEN TO SHOW ACTUAL CONDITION.

*01 SHOWN

commodore

PCB ASSY-
PET 64K MEMO

PET 64K 8032

SIZE D | 8032110

SCALE 2/1 | SHEET 4 OF

REVISIONS				
LTR	ECN#	DESCRIPTION	DATE	APPROVED
A		PRODUCTION RELEASE		
B		REV PER ECO 2209		
C		REV PER ECO 2241		
D		REV PER ECO 2575		
E	4	REV PER ECO 2769		

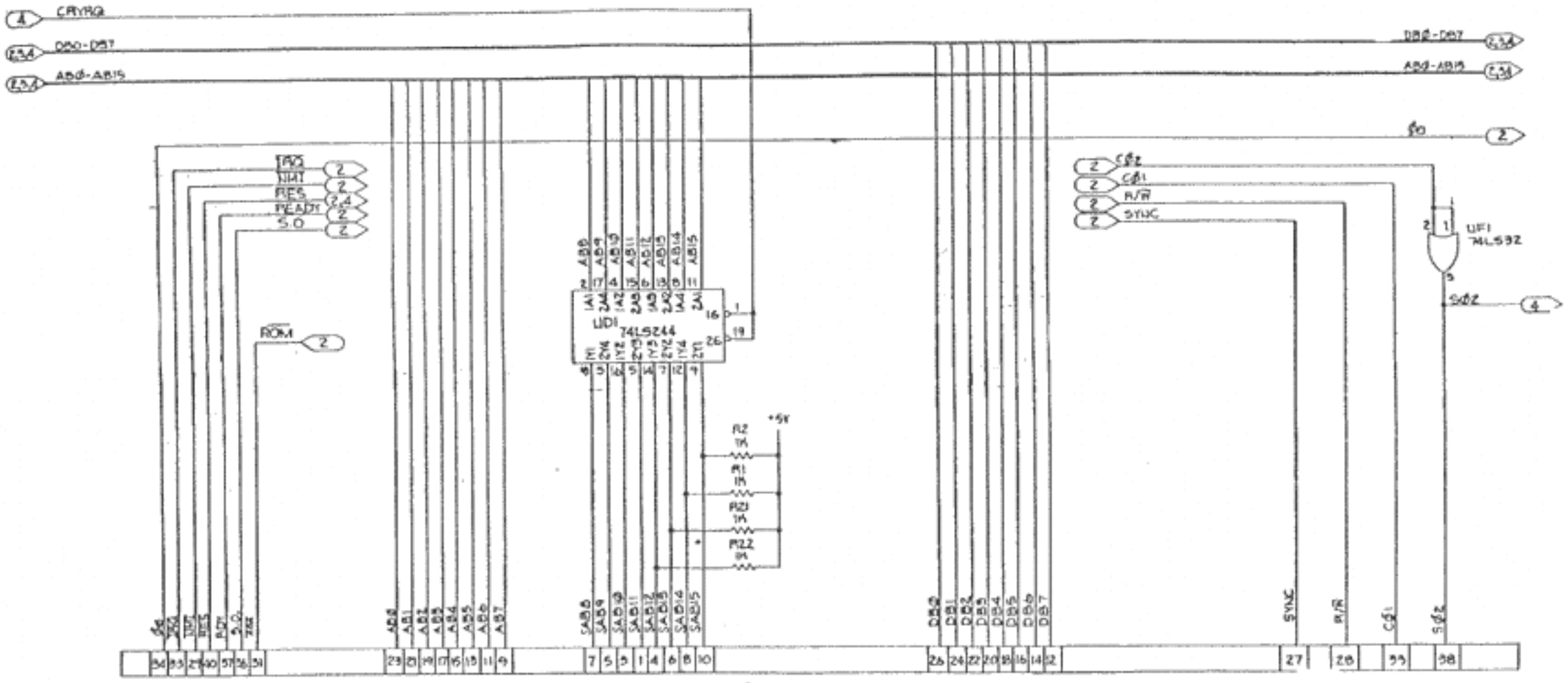

-01 SHOWN

3. DO NOT MOUNT FLUSH TO THE BOARD. MOUNT STANDING UP.
2. CAPACITANCE VALUES ARE IN MICROFARADS, 50V.
1. RESISTANCE VALUES ARE IN OHMS, 1/4W ±5%.
NOTES-UNLESS OTHERWISE SPECIFIED:

commodore

LOGIC DIAGRAM-
PET 64K MEMORY

PET 64K | 8032110 | REV D | 8032111 | REV E

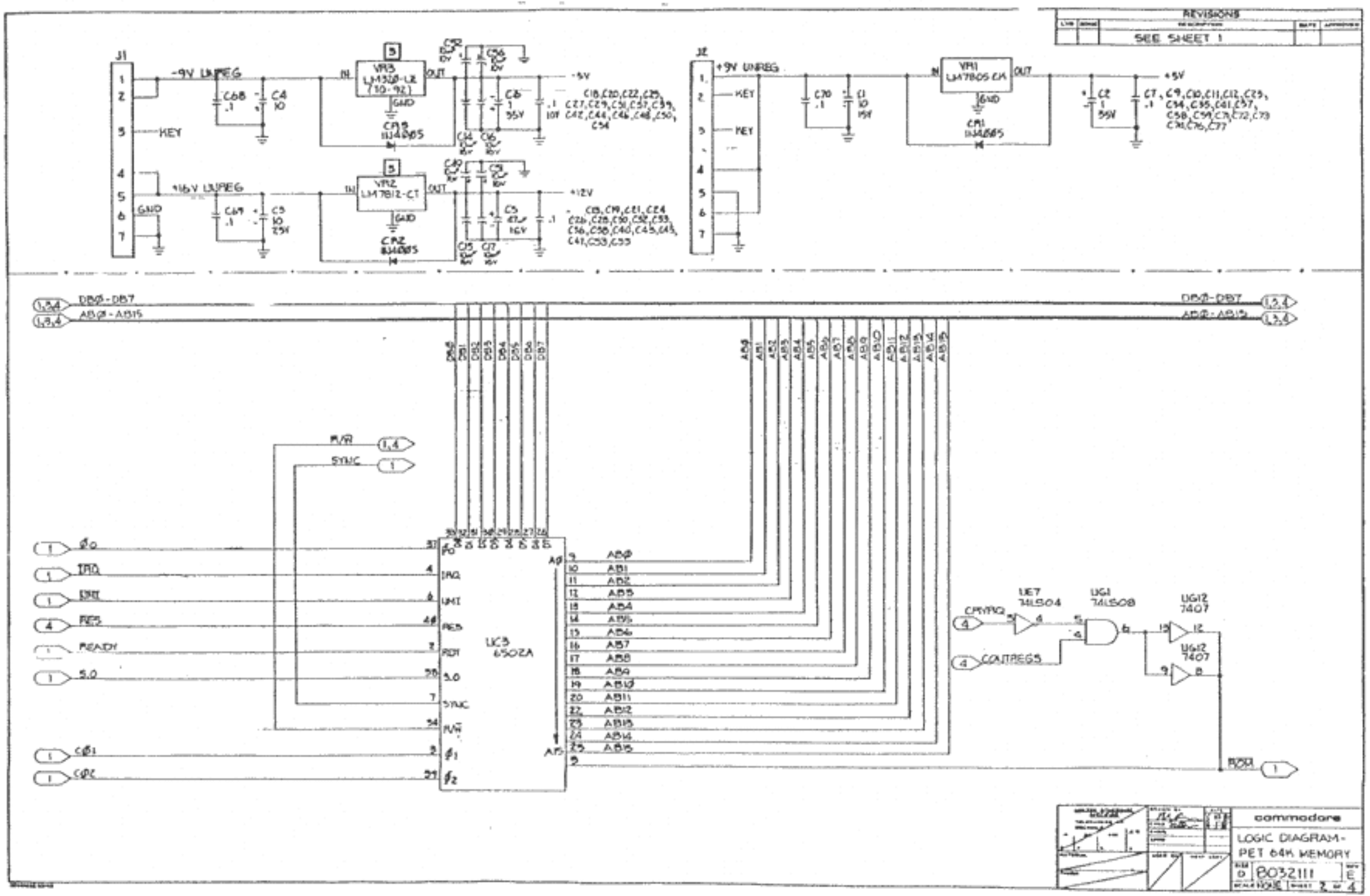
REVISIONS
SEE SHEET 1
J1
-9V UNREG
KEY
+16V UNREG
GND
VR3 LM320-L2 (TO-92)
VR2 LM7812-CT
+5V
+12V
J2
+9V UNREG
VR1 LM7805 CK
DB0-DB7
AB0-AB15
R/W
SYNC
UC3 6502A
CRYPQ
COUTREGS
UE7 74LS04
UG1 74LS08
UG12 7407
ROM
commodore
LOGIC DIAGRAM-
PET 64K MEMORY
8032111

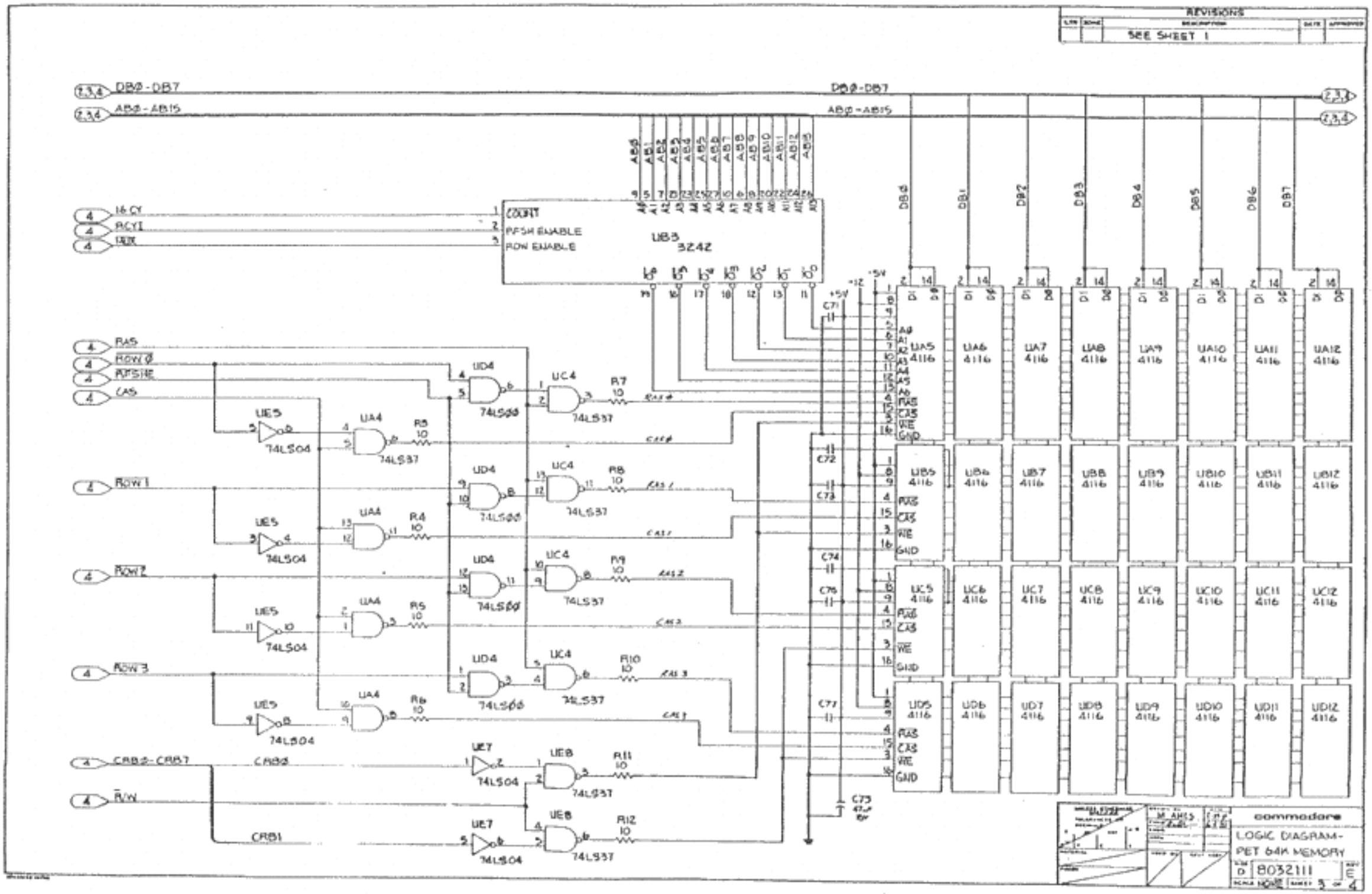
REVISIONS
SEE SHEET 1
DB0-DB7
AB0-AB15
16 CY
RCYI
UBR
COUNT
RFSH ENABLE
ROW ENABLE
UB3
3242
RAS
ROW 0
RFSHE
CAS
ROW 1
ROW 2
ROW 3
CRB0-CRB7
R/W
CRB0
CRB1
74LS04
74LS00
74LS37
UA4
UB4
UC4
UD4
UE5
UE7
UE8
R3
R4
R5
R6
R7
R8
R9
R10
R11
R12
C71
C72
C73
C74
C75
C76
C77
+5V
+12
UA5 4116
UA6 4116
UA7 4116
UA8 4116
UA9 4116
UA10 4116
UA11 4116
UA12 4116
UB5 4116
UB6 4116
UB7 4116
UB8 4116
UB9 4116
UB10 4116
UB11 4116
UB12 4116
UC5 4116
UC6 4116
UC7 4116
UC8 4116
UC9 4116
UC10 4116
UC11 4116
UC12 4116
UD5 4116
UD6 4116
UD7 4116
UD8 4116
UD9 4116
UD10 4116
UD11 4116
UD12 4116
commodore
LOGIC DIAGRAM-
PET 64K MEMORY
8032111
SCALE NONE
SHEET 3 OF 4

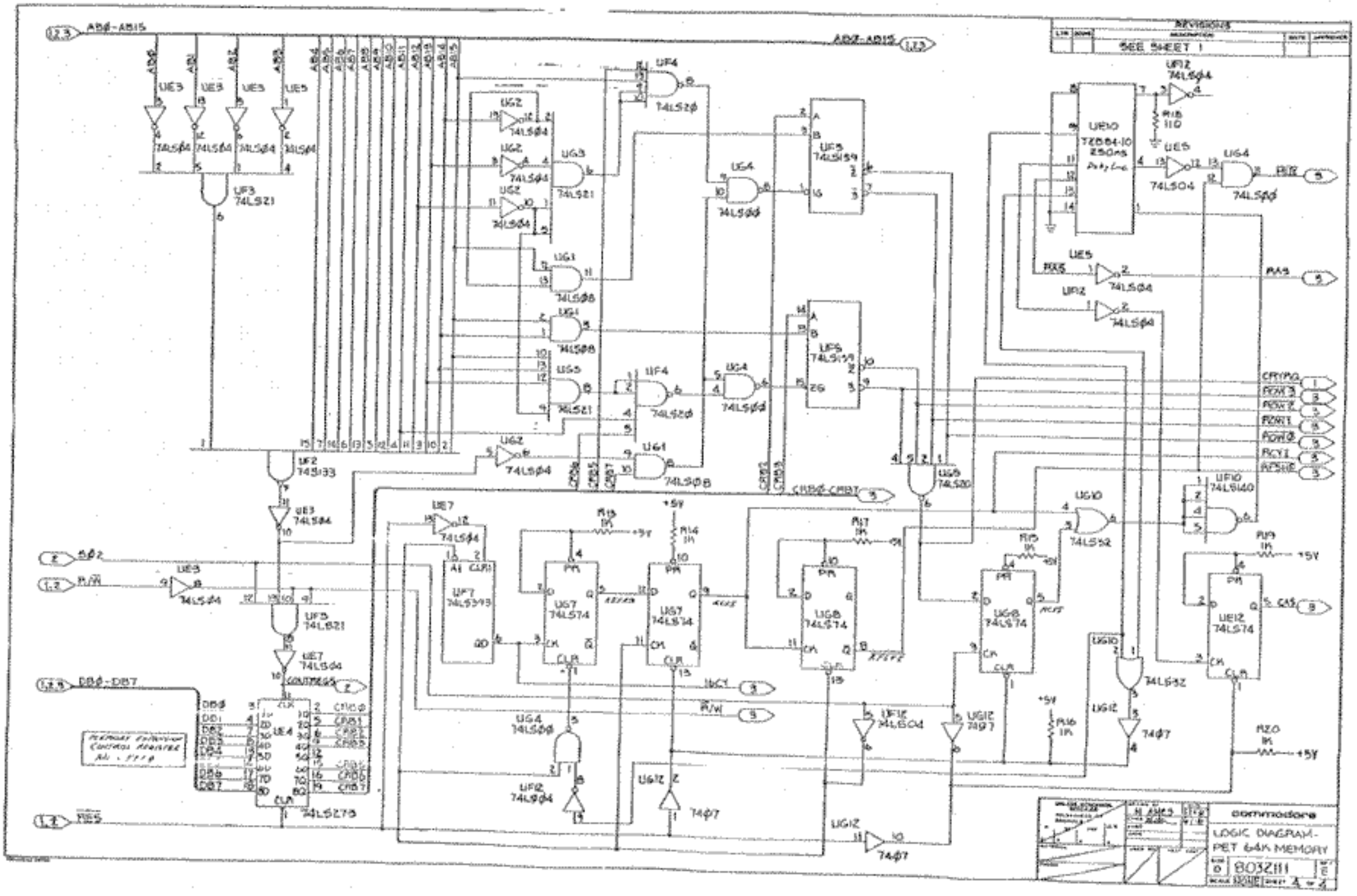
SEE SHEET 1
AB0-AB15
UE3 74LS04
UF3 74LS21
UG2 74LS04
UG3 74LS21
UF4 74LS20
UG4 74LS00
UE5 74LS139
UG1 74LS08
UG5 74LS21
UF4 74LS20
UG4 74LS00
UE5 74LS139
UG1 74LS08
UG2 74LS04
UF2 74LS33
UE3 74LS04
UE10 TZB84-10 250ns Poly Line
UF12 74LS04
R18 110
UE5 74LS04
UG4 74LS00
PHI2
RAS
UF12 74LS04
CRYPG
ROW3
ROW2
ROW1
ROW0
RCY1
RPSHE
CRB0-CRB7
UG8 74LS20
UG10 74LS32
UF10 74LS140
R19 1K
+5V
UE7 74LS04
R15 1K
R14 1K
R17 1K
R19 1K
UF7 74LS393
UG7 74LS74
UG7 74LS74
UG8 74LS74
UG8 74LS74
UE12 74LS74
CAS
UE3 74LS04
UF3 74LS21
UE7 74LS04
CONTROL
DB0-DB7
UE4 74LS273
CRB0
CRB1
CRB2
CRB3
CRB4
CRB5
CRB6
CRB7
RCY
R/W
UG4 74LS00
UF12 74LS04
UG12 74LS07
UG12 74LS32
UG12 74LS07
R16 1K
R20 1K
+5V
UF2 74LS04
UG12 74LS07
UG12 74LS07
RES
commodore
LOGIC DIAGRAM - PET 64K MEMORY
0
803211

LTR	DESCRIPTION	DATE	APPROVED
A	PRODUCTION RELEASE		
B	REV PER ECO 2064		
C	REV PER ECO 2095		
D	REV PER ECO 2187		

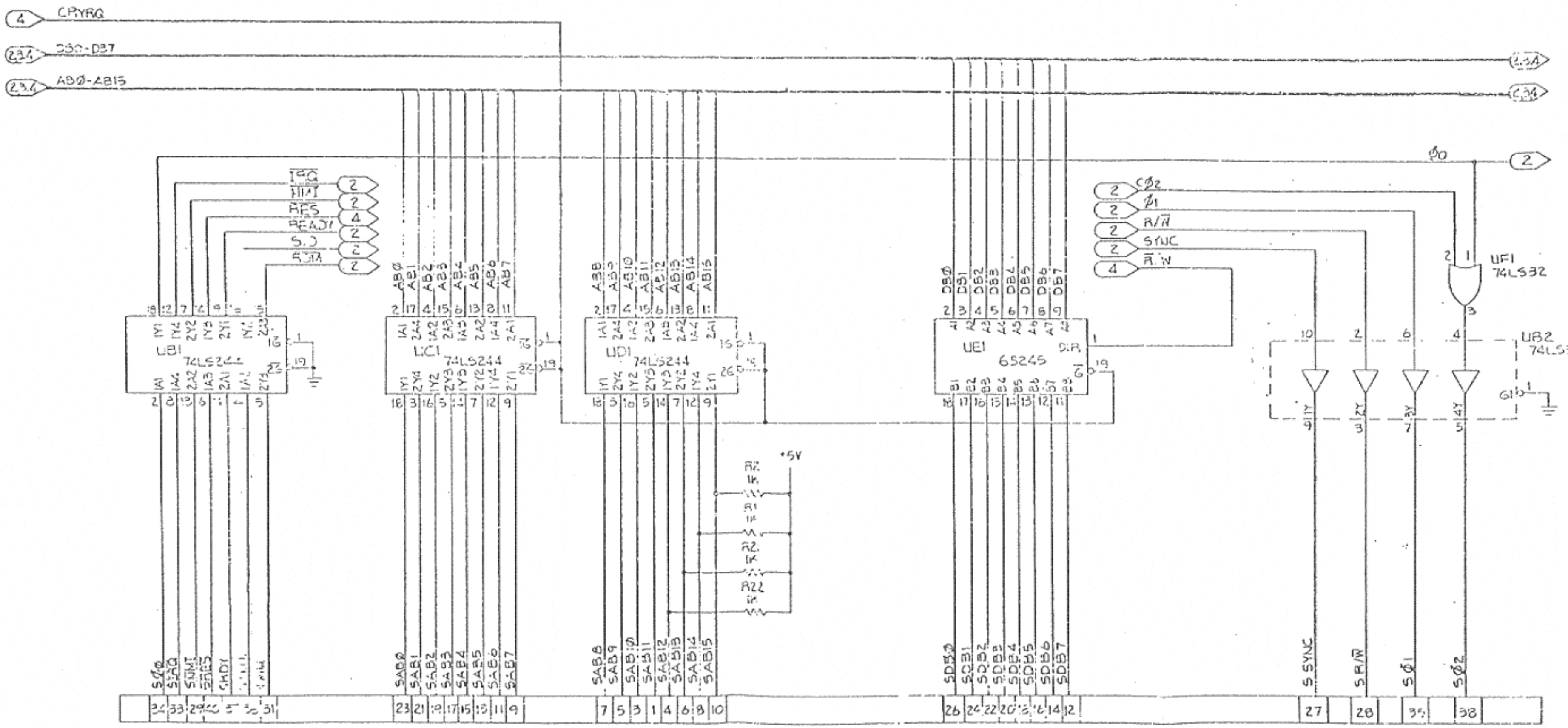

-01 SHOWN

3. DO NOT MOUNT FLUSH TO THE BOARD. MOUNT STANDING UP.
2. CAPACITANCE VALUES ARE [illegible] CERAMICS, 50V.
1. RESISTANCE VALUES ARE IN OHMS, 1/4W, 5%.
NOTES-UNLESS OTHERWISE SPECIFIED:

commodore

LOGIC DIAGRAM
PET 64K MEMORY

PET 64K | 8022085 | D | 8032084

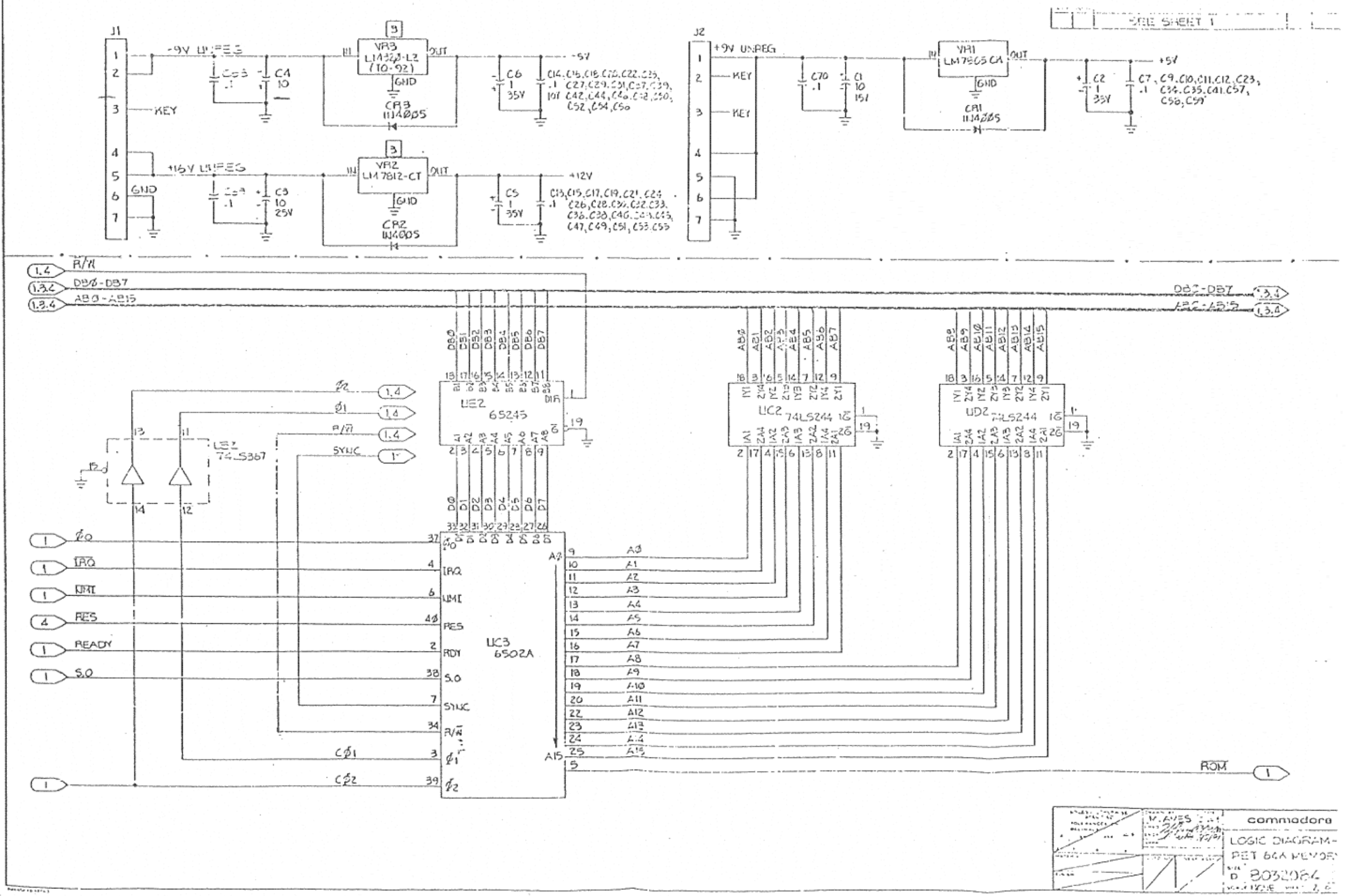
SEE SHEET 1
J1
-9V UNREG
KEY
+16V UNREG
GND
VR3 LM320-L2 (10-92)
VR2 LM7812-CT
CR3 1N4005
CR2 1N4005
C3 .1
C4 10
C9 .1
C8 10 25V
C6 1 35V
C5 1 35V
-5V
+12V
J2
+9V UNREG
KEY
VR1 LM7805 CA
CR1 1N4005
C70 .1
C1 10 15V
C2 1 35V
+5V
R/W
DB0-DB7
AB0-AB15
UE2 65245
UC2 74LS244
UD2 74LS244
UE1 74LS367
UC3 6502A
SYNC
IRQ
NMI
RES
READY
S.O
CΦ1
CΦ2
ROM
commodore
LOGIC DIAGRAM-
PET 64K MEMORY
8032064

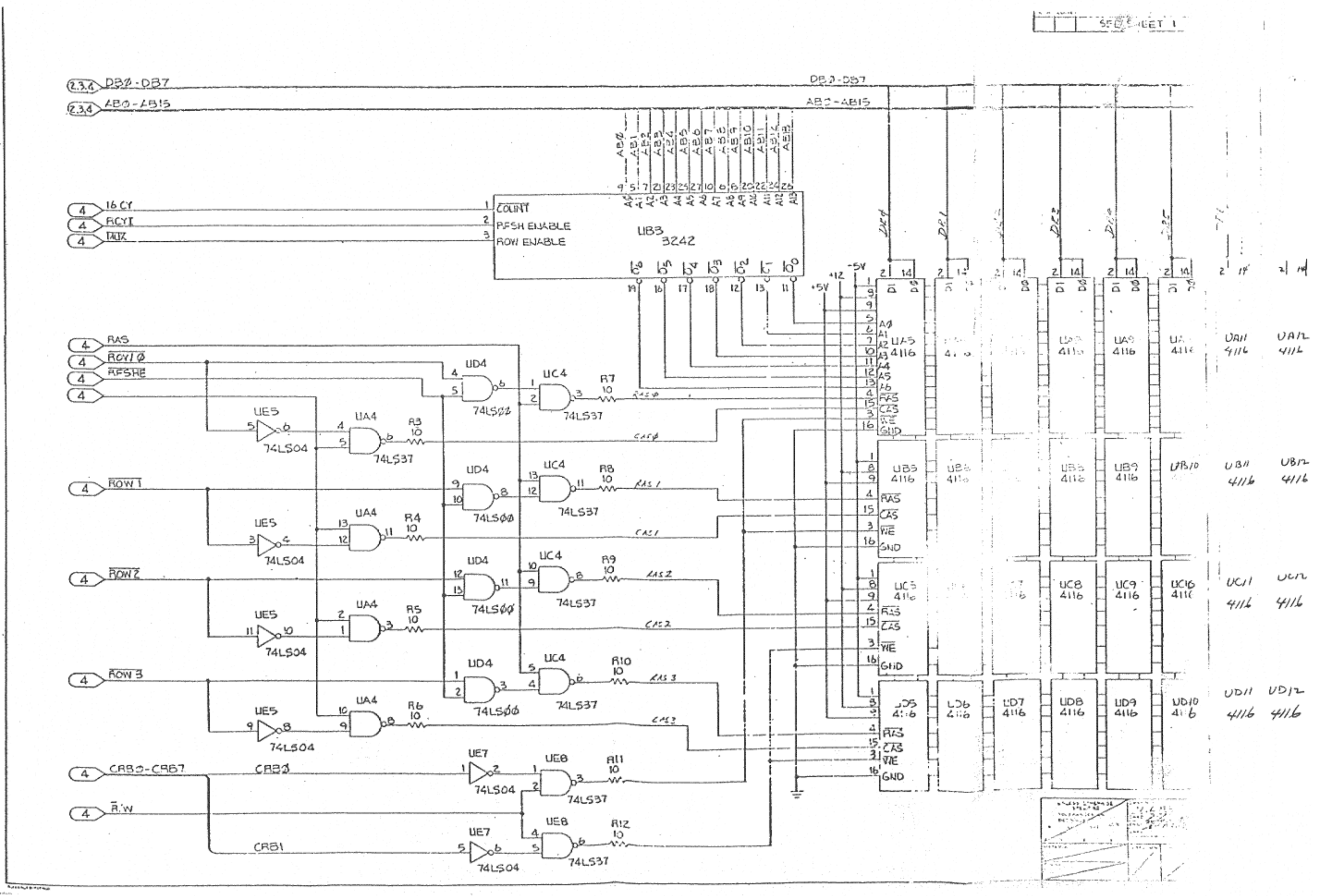
SHEET 1
DB0-DB7
AB0-AB15
16 CY
RCYT
DAUX
RAS
RCYT Ø
RFSHE
ROW 1
ROW 2
ROW 3
CRB0-CRB7
R/W
CRB0
CRB1
UB3
3242
COUNT
RFSH ENABLE
ROW ENABLE
UA5
UB5
UC5
UD5
4116
UA9
UB9
UC9
UD9
UA11
UB11
UC11
UD11
UA12
UB12
UC12
UD12
UD4
74LSØØ
UC4
74LS37
UA4
UE5
74LS04
UE7
UE8
R3
R4
R5
R6
R7
R8
R9
R10
R11
R12
10
RAS Ø
CAS Ø
RAS 1
CAS 1
RAS 2
CAS 2
RAS 3
CAS 3
+12
+5V
-5V

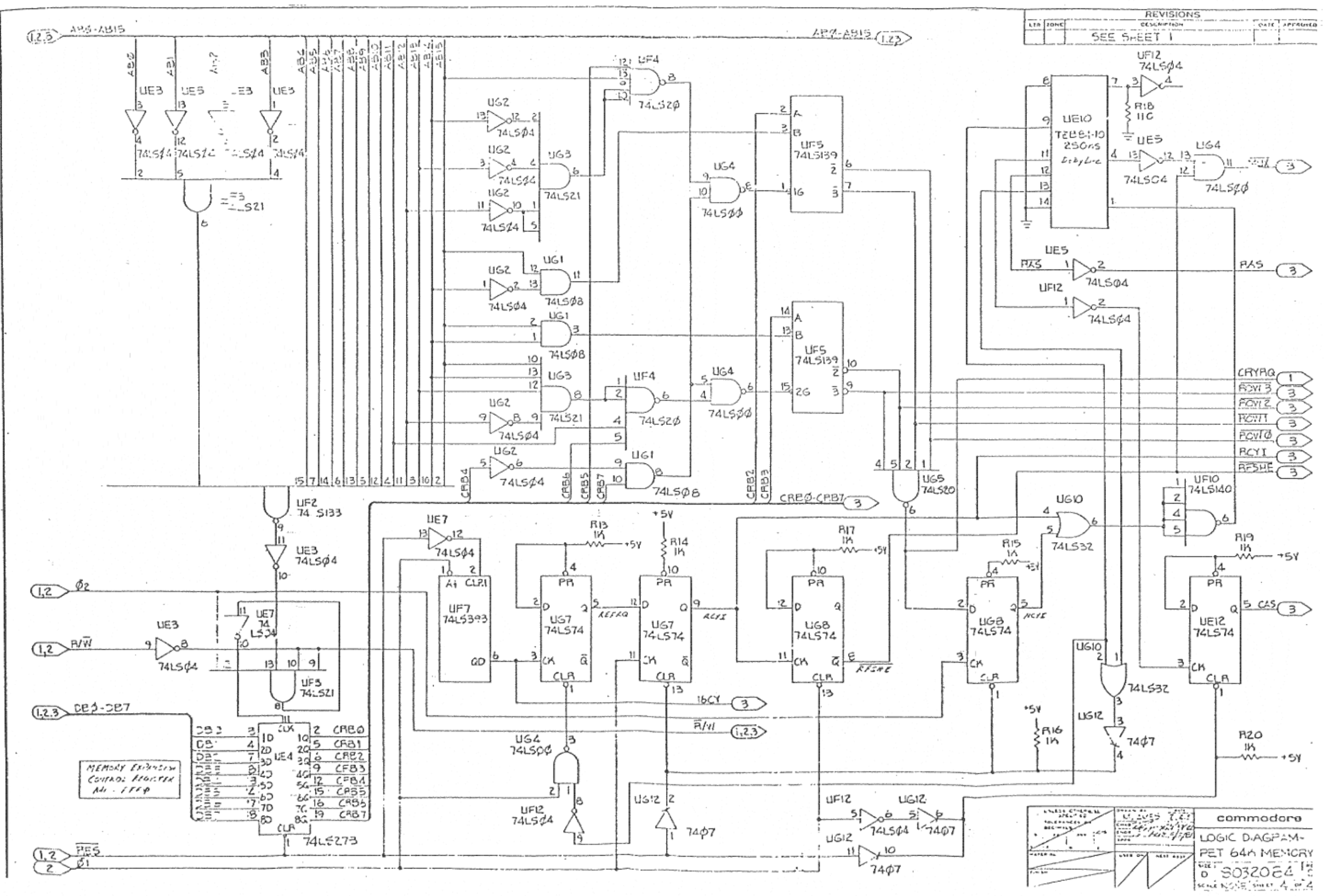
REVISIONS
SEE SHEET 1
AB0-AB15
UE3
74LS14
UE5
74LS21
UF2
74 S133
UE3
74LS04
UE7
74 LS04
UF3
74LS21
UE4
74LS273
UF4
74LS20
UG2
74LS04
UG3
74LS21
UG1
74LS08
UF5
74LS139
UG4
74LS00
UG5
74LS20
UF7
74LS393
UG7
74LS74
UG8
74LS74
UE12
74LS74
UE10
TEB8410
250ns
UF12
74LS04
UE5
74LS04
UG4
74LS00
UF10
74LS140
UG10
74LS32
UG12
74LS07
R13
1K
R14
1K
R15
1K
R16
1K
R17
1K
R19
1K
R20
1K
+5V
CRB0-CRB7
CRYRQ
RCYI
RCYE
RFSHE
RAS
CAS
16CY
R/W
DB0-DB7
PES
Ø2
Ø1
MEMORY EXPANSION CONTROL REGISTER A4 - FFF0
commodore
LOGIC DIAGRAM-
PET 64K MEMORY
S032024